BEAR CREEK WATER & SANITATION DISTRICT

ENGINEERING STANDARDS

Revised 01/01/2020

Approved_____

EXHIBIT A

A. Water Standards

The Bear Creek Water and Sanitation District (District or Bear Creek) has adopted the Engineering Standards of the Denver Board of Water Commissioners with some more stringent requirements, which are as follows:

The District Engineer shall have the authority to add or delete any additional reasonable requirements from time to time.

Plans: All waterline extensions must be shown on a plan and profile drawing prepared by a registered Professional Engineer in the State of Colorado, be at a scale of 1" =200', and must meet all requirements of Denver Water, CDPHE, EPA, and Bear Creek criteria.

Depth: The water line shall be placed four and one-half (4-1/2) feet below finished grade to the top of pipe. A greater depth can only be utilized if prior approval is granted by the District Engineer. Maximum depth shall be seven (7) feet below finished grade to the top of pipe.

Valves: All valves shall be turned "Right" for open and shall be restrained for the Bear Creek areas.

Fire Hydrants: The District will only allow the use of Mueller Centurion Model A-473 (open right) or a Waterous WB-67-250 with a 1-1/2 inch pentagon-operating nut. Hydrants and auxiliary valves will open the same (same direction) as gate valves, when they are in the Bear Creek area (see above).

Fire Line: Fire Lines for sprinkler systems are owned by the Owner and must be maintained from the connection to the main line (including the tee or gate valve) through the building by the Owner. Although the District will have the right to inspect the line and require the Owner to maintain the line for continued service. If the Owner does not maintain the line, the District may maintain it, repair leaks, etc. and will charge the Owner for such service, which the Owner must pay within thirty (30) calendar days.

Crossing: Crossings of non-potable lines, sewer lines, storm sewer lines with domestic water line shall follow the Colorado State Health Department Code. Connections from PVC to ductile iron shall be made by the use of the inst-fitting with SDR 35 gasket or a dresser fitting. Bear Creek Standard Detail attached.

Tracer Wire: All water mains and service pipes shall have a tracer wire. Install a 12-gauge single strand copper tracer wire to pipe with 2-inch wide PVC tape. Splicing of tracer wire shall be per manufacturer's recommendation. The tracer wire shall run to a test station that shall be next to a fire hydrant. See Denver Water Department Engineering Manual, Standard Detail Sheet 11.

Restraint: All bends, tees, fire hydrants, blowoffs and plugs at dead end mains shall be protected from thrust by using concrete thrust blocks based on 1,500 psf maximum allowable soil pressure. If soil pressure changes, then the Developer will submit the new calculation for the thrust blocks that must be prepared and signed by a Colorado Registered Professional Engineer. All above listed items and in-line

valves shall also be mechanically restrained using mega-lugs. Tees will be restrained on all three legs. The mechanical joint restraint devices shall be of the type listed or equal, approved by the District. For ductile iron pipe: EBBA Iron, Inc. Megalug 1100 Series (4" – 36"). For PVC Pipe: EBBA Iron, Inc. Megalug 2000 PV Series (4" – 12"). For Push-on Joints: DIP, EBBA Iron Megalug 1700 Series (4" – 36"). PVC, EBBA Iron, Inc. Megalug 1500 Series (4" – 12"). Fire hydrant laterals and fire lines shall be mechanically restrained using megalugs for the full length of the line. See Bear Creek Standard Detail attached.

Compaction of all trenches must be attained, and compaction test results submitted to the District. All backfill shall be compacted to a minimum of 95% standard proctor density under roadways or higher if required by the City of Lakewood or the Colorado Department of Transportation.

Adjacent parallel piping carrying the same or any other substance must be a minimum of 6-feet or more horizontally away from the water line. If the "other" parallel pipe carries sewer or other hazardous substances, CDPHE Rules and Regulations Section 8.8 of the State of Colorado, Design Criteria for Potable Water Systems MUST BE FOLLOWED.

Service Lines and Meters/Backflow Devices

All meters shall be installed in an outside meter pit. The District does not allow the meter inside the building. Also, the District will allow the service to connect to the fire line (combination service line). See Denver Water Department Engineering Manual, Standard Details Sheets 47 and 48.

Water service shall be one service per building unless each unit is separately owned. A determination whether the service line will connect directly into a District main or private main first then into a District main will be made by the District Engineer. The Board may waive the requirement of a separate service line if a standard Unified Service Agreement has been entered into with the District. A duplex will have two service line connections so that each duplex unit shall be separately tapped and metered.

See Standard Drawings in the DWD Manual for details to be used within the District's boundaries with the changes noted above.

Backflow prevention devices shall be a minimum of a reduced pressure device, Febco 825YA or equal. This will be installed on all commercial or industrial taps and on residential taps where the property has a well or other water source located on it. If the property has a well or other water source on it, then a dual source water agreement must be signed. Also, testing of the backflow prevention device must be checked yearly by a certified technician with results of the testing to be sent to the District. Fire lines must also have a reduced pressure backflow prevention device.

Sprinkler systems for any building cannot be connected inside any meter vault.

For residential single-family homes Bear Creek will only allow Option 1 of the NFPA 3D Residential Sprinkler Services of the Denver Water Department, see Bear Creek Standard Detail attached.

Removal of an existing service line directly tapped onto a cement asbestos pipe, or a saddle tap older than 6 years that is tapped on any type of pipe within Bear Creek, will be removing the existing corp stop valve and install a Ford FS2 (4"-16") Stainless Steel Repair Clamp or equal approved by the District Engineer. Removal of an existing water service line tap less than 6 years old, will be to remove the existing saddle/corp stop valve and install a brass corp stop plug Ford Series (CSP-3-A-NL, CSP-3-I-NL, or CSP-3-IT-NL) or equal, approved by the District Engineer.

B. Sanitary Sewer Standards

The Sanitary Sewer Design Technical Manual of the Wastewater Management Division of the Denver Department of Public Works has been adopted by the District, with modifications as follows:

The District Engineer shall have the authority to add or delete any reasonable additional requirements from time to time.

All piping running parallel to the sanitary sewer line shall be a minimum of 6-feet horizontally away and at crossings must be 18-inches vertically separated. All crossing/parallel lines shall follow the Colorado Department of Health and Environment Regulations. Section 8.8 of the State of Colorado Design Criteria must be followed.

The bedding material shall be clean well graded squeegee sand and shall conform to the following limits when tested by means of laboratory sieves:

SIEVE SIZE	TOTAL PERCENT PASSING BY WEIGHT
3/8 Inch	100
No. 200	0 – 5

See attached sheets of details.

Sanitary Sewer mains shall be polyvinyl chloride (PVC) manufactured in accordance with ASTM D-3034, SDR 35, as manufactured by Certainteed, J-M Manufacturing, Vinyl-Tech, ETI, Inc. or District approved equal. Service lines shall be of the same material as the mains or can be Schedule 40, glued or rubber gaskets are allowed. All sewer mains and services must have tracer wires on them for future location and a cleanout at property line. Install a 12-guage single strand copper tracer wire on pipe with 2-inch wide PVC tape. Splicing tracer wire shall be per manufacturer's recommendation. The tracer wire shall run to a test station next to a manhole or cleanout. Bear Creek Standard detail is attached.

If tying into an existing manhole the nearest proposed manhole to the point of tie-in shall be plugged with a plumbers' plug on the outlet side by the contractor. The plug shall remain in place until acceptance by the District. Its purpose is to prevent any mud, water, or other materials from entering the existing line during construction. The contractor shall be responsible for pumping and cleaning these manholes and removing the plug when instructed by the District. If tying into an existing line with a new manhole the existing pipe at the point of connection shall not be broken out until the Owner is directed to do so by the District.

All manholes shall be 48-inches in diameter with 24-inch ring and cover and eccentric cone unless otherwise specified. If tying into an existing manhole, the connection must be machine cored. The contractor shall take care to properly shape all manhole inverts and benches to promote smooth flow through the manhole. Manhole inverts shall be constructed with a smooth trowel finish and benches finished with a light broom, non-skid finish. Any manhole less than 8.5-feet deep shall be required to have a flat top section instead of the eccentric cone. All manholes more than 20-feet deep shall have an intermediate landing. See standard manhole details attached.

Tees are required at all service to main connections. See Bear Creek Standard Detail attached.

At the end of a cul-de-sac, a maximum of three (3) 4-inch service connections will be allowed at a manhole. The invert of the manholes must be shaped to accommodate the services. In any other situation, only one (1) service connection will be allowed to a manhole and the service line must be one (1) size smaller than the main line. If a service is one size smaller than the existing main, then a manhole must be installed at the connection. The manhole invert will be reshaped to accommodate the service's connection and provide a smooth flow through the manhole.

A separate and independent sewer service line shall be provided for every building. An independent sewer service line is required for individually owned units. A determination whether the service line will connect directly into a District main or private main first then into a District main will be made by the District Engineer. The Board may waive the requirement of a separate service line if a standard Unified Service Agreement has been entered into with the District.

Duplex properties must have a single sewer line for each unit. Each single-story commercial structure shall have an individual sewer service line and connection for each commercial unit in the commercial structure, or, if not divided into units then it shall have a separate service line and connection for each building. Multi-story commercial, retail and office buildings may have a common private sewer service if the District Engineer makes this determination. If the above is determined, then as a minimum, the private pipe must be six (6) inches in diameter, have a minimum slope of one (1) percent, must be able to accommodate a two-compartment grease interceptor in each unit and the Board must approve a Unified Service Agreement between the District and the owner.

Drop manholes are discouraged, but if allowed by the District in writing the drop must be an outside drop. See standard detail attached.

Connection of a service line to a sewer main will be machined tapped and will require a saddle tee connection (as approved by the District), or in the case where the service line is only one (1) size different (6-inch to an 8-inch or 8-inch to 12-inch, etc.) will require a manhole to be installed.

Each business, restaurant, bar, school, medical center, nursing home, establishment or other customer regularly providing food service to its customers, residents, patrons, patients, or members of the general public shall have a grease interceptor. There are no automatic variances; however, a Grease Interceptor variance may be requested in writing to the District. The minimum size will be determined by the District Engineer or District Operations Manager. Under the sink and In-the-floor models are allowed but must have two (2) compartments and must meet Health Department Codes.

Each business, gasoline or automotive service station, vehicle lubricating, maintenance, or repair facility, car wash, automotive wrecking yard, school, automotive dealership with repair facilities, establishment or any other customer regularly providing vehicle lubrication, maintenance, disposal or repair services to its customer, patrons, members of the general public, or for its own benefit, shall have a sand and oil interceptor. See section on sand/oil traps and grease traps.

Testing of the sanitary sewer system shall be per Exhibit B, “Tests for Leakage and Infiltration after Construction of Sewer Lines”, by ASTM C1244-93, and manhole testing as required by ASTM C1244-05a$^{\epsilon 1}$, and ASTM C828.

EXHIBIT B

TESTS FOR LEAKAGE AND INFILTRATION AFTER CONSTRUCTION OF SEWER LINES

Pursuant to these Rules and Regulations, unless deemed unnecessary by the District Engineer in their reasonable discretion, each section of newly constructed or replaced sewer line between two successive manholes shall be tested for leakage and/or infiltration before probationary acceptance of the line. The contractor shall furnish all materials required for the tests. Tests shall be made in the presence of the District Engineer, Bear Creek Operations Manager, or a field representative.

If, in the opinion of the District Engineer, heavy compaction equipment or any of the operations of the contractor or others may have damaged or affected the required watertight integrity of a previously tested line, a retest may be required.

If the leakage and/or infiltration rate as shown by the test exceeds allowable amounts, the pipe joints shall be repaired or, if necessary, the pipe shall be removed and re-laid by the contractor.

The contractor may, at their option, air test or water test for leakage except where (a) in the opinion of the District Engineer, excessive groundwater is encountered, so that the infiltration test shall be required, or (b) where the difference in elevation between the invert of the upper structure and the invert of the lower structure is more than 10-feet, in which event the air test shall be utilized.

Leakage Tests:

A. Exfiltration:

Gravity concrete and clay sewer lines shall permit not more than two hundred (200) gallons of infiltration per day, per mile of pipe, per inch nominal diameter. PVC sewer lines shall permit not more than fifty (50) gallons of infiltration per day, per mile of pipe, per inch nominal diameter.

In areas where the groundwater level is less than one foot (1') above the pipe, the contractor shall perform an exfiltration or leakage test. After capping and blocking all wyes or tees, the pipe between successive manholes shall be filled with water, including the upstream manholes.

The water depth above the pipe invert at the lower end shall be at least to the elevation of the ground surface, unless otherwise specified. The maximum depth at the lower end shall not exceed 25-feet, and the minimum depth at the upper end shall be at least five feet (5') above the crown of the pipe or five feet (5') above groundwater elevation, whichever is higher. The amount of water added during the test period from the section under test to maintain the water level shall be measured and it shall not exceed a rate of two hundred (200) gallons exfiltration per day, per mile of pipe, per inch nominal diameter for concrete and clay pipe and shall not exceed a rate of fifty (50) gallons exfiltration per day, per mile of pipe, per inch nominal diameter for PVC pipe.

For purposes of determining maximum allowable leakage, nominal diameter and depth of manholes shall be included. The exfiltration tests shall be maintained on each reach for at least two (2) hours or as long as necessary, in the opinion of the District Engineer to locate all leaks.

The contractor shall provide, at his own expense, all necessary piping between the reach to be tested and the source of water supply, and all labor, equipment, and materials required for the tests. The methods used and the time of conducting exfiltration tests shall be acceptable to the District Engineer.

The contractor shall take all necessary precautions to prevent any joints from separating, or other damage to the pipelines or their appurtenances or to any structures, while the tests are being performed.

The length of hose connection shall not be used in computing the length of sewer main being tested.

All tests must be completed before street or trench is resurfaced, unless otherwise directed by the District Engineer.

B. Low Pressure Air Testing:

Low pressure air testing may be used in lieu of exfiltration testing for 24-inch diameter and smaller PVC sewer pipe. Air testing shall not be used for manholes.

Low pressure air testing shall comply with ASTM C828 for PVC pipe. The schedule of testing shall be submitted to and accepted by the District Engineer prior to starting the tests.

The pipe to be tested shall first be cleaned by propelling a snug fitting, inflated rubber ball through the pipe with water. All pipe outlets shall be plugged with suitable test plugs and each plug shall be braced securely. If pipe to be tested is submerged in groundwater, insert a pipe probe by boring or jetting into the backfill material adjacent to the center of the pipe and determine the pressure in the probe when air passes slowly through it. This is the back pressure due to groundwater submergence over the end of the probe. All gauge pressures in the test should be increased by this amount. If a test pressure greater than 10 psi results, air testing shall not be used, and exfiltration or infiltration testing will be required.

Air shall be added slowly to the portion of the pipe begin tested until the internal air pressure is raised to four (4) psig. The compressor used to add air to the pipe shall have a blow-off valve set at 10 psi to assure that at no time the internal pressure in the pipe exceeds 10 psi.

After an internal pressure of four (4) psig is obtained, allow at least two (2) minutes of air temperature to stabilize, adding only the amount of air required to maintain pressure. When the pressure decreases to three and one-half (3-1/2) psig, start the stopwatch. Determine the time in seconds that is required for the internal air pressure to reach two and one-half (2-1/2) psig.

Minimum permissible pressure holding times for runs are calculated using the following formula:

T = 0.000183 D2L
T = Test time in minutes
D = Inside diameter of pipe in inches
L = Distance between successive manholes in feet

If the pressure drop from 3.5 psi to 2.5 psi occurs in less time than the above calculated values, the pipe shall be overhauled and, if necessary, replaced and re-laid, at the contractor's expense, until the joints and pipe shall hold satisfactorily under this test.

This air test may be dangerous if, because of ignorance or carelessness, a line is improperly prepared. It is extremely important that the various plugs be installed and braced in such a way as to prevent blowouts. In as much as a force of two hundred and fifty pounds (250 lbs.) is exerted on an eight-inch (8") plug by an internal pipe pressure of five (5) psig, it should be realized that sudden expulsion of a poorly installed plug, or of a plug that is partially deflated before the pipe pressure is released, can be dangerous. As a safety precaution, pressurizing equipment should include a regulator set at perhaps ten (10) psi to avoid over-pressurizing and damaging an otherwise acceptable line. No one shall be allowed in the manholes during testing.

C. Infiltration Test:

If, in the construction of a section of the sewer between structures, excessive groundwater is encountered, the test for leakage described in the exfiltration test shall not be used; instead, the end of the sewer at the upper structure shall be closed sufficiently to prevent the entrance of water, and pumping of groundwater shall be discontinued for at least three (3) days after which the section shall be tested for infiltration. The infiltration for concrete and clay lines shall not exceed 200 gallons per inch of nominal diameter per mile of sewer line per day of main-line sewer being tested, or as indicated in Table I, and for PVC lines, the infiltration shall not exceed 50 gallons per inch of nominal diameter per mile of sewer line, per day of main-line sewer being tested, or as indicated in Table II, and does not include the length of hose laterals entering that section.

Where any infiltration in excess of this amount is discovered, the line shall be immediately uncovered, and the amount of infiltration reduced to a quantity within the specified amount of infiltration before the sewer is accepted, at the expense of the contractor.

Should, however, the infiltration be less than the specified amount, the contractor shall stop any individual leaks that may be observed when ordered to do so by the District Engineer. The contractor shall furnish all labor and materials for performing the tests required. All tests must be completed before street or trench is resurfaced, unless otherwise directed by the District Engineer.

TABLE I

ALLOWABLE LIMITS OF INFILTRATION FOR CONCRETE AND CLAY PIPE
200 Gal./Inch Dia./Mi./Day
or 0.16 Gal./Inch Dia./100'/Hr.

Diameter of Sewer (Inches)	Infiltration Gal./Hr./100' (Gallons)
8	1.3
10	1.6
12	1.9
15	2.4
18	2.8
21	3.3
24	3.8
27	4.3
30	4.8
36	5.7

ALLOWABLE LIMITS FOR INFILTRATION
FOR MANHOLE STRUCTURES

Diameter of Manhole (Inches)	Infiltration Vertical ft. / hr.
41	0.07
48	0.08
60	0.10
72	0.12

TABLE II
ALLOWABLE LIMITS FOR INFILTRATION
FOR PVC PIPE
50 Gal./Inch Dia./Mi./Day
or 0.04 Gal./Inch Dia./100'/Hr.

Diameter of Sewer (Inches)	Infiltration Gal./Hr./100' (Gallons)
8	0.32
10	0.40
12	0.48
15	0.60
18	0.72
21	0.84
24	0.96
27	1.08
30	1.20
36	1.44

D. Tests for Alignment and Grade, and Damaged or Defective Pipe in Place

After the pipe has been installed, tested for leakage, backfilled, manhole raised to grade, and the trenches reinforced, the District Engineer or Bancroft-Clover Field Representative will "lamp" all lines and will have the contractor T.V. all lines. All defective portions of the new facilities will be noted to the contractor after the lamping operation or T.V. operation is complete. All lines should be flushed, and manholes cleaned by the contractor prior to "lamping" and T.V.ing. The Contractor will provide a deflection test (mandrel) of the line. No flushed water or material shall be discharged to existing sewer lines. The T.V., lamping, and mandrel tests will be performed at the expense of the contractor/owner and will become the property of the District after interpretation.

E. Negative Air Pressure (Vacuum) Test

All manholes shall be vacuum tested per ASTM C1244-05a$^{\epsilon 1}$ and must pass the minimum requirements of ASTM C1244-05a$^{\epsilon 1}$. Test results shall be forwarded to the District.

Prior to testing, all lift holes shall be plugged and all pipes entering the manhole shall be temporarily plugged taking care to securely brace the pipes and plugs to prevent them from being drawn into the manhole.

During testing, the test head shall be placed at the top of the manhole in accordance with the manufacturer's recommendations. A vacuum of 10 in. Hg shall be drawn on the manhole, the valve on the vacuum line of the test head closed, and the vacuum pump shut off. The time shall be measured for the vacuum to drop from 10 in. Hg to 9 in. Hg. The manhole is acceptable if the time for the vacuum reading to drop from 10 in. Hg to 9 in. Hg meets or exceeds the values indicated in Table 1 (Minimum Test Times for Various Manhole Diameters).

If the manhole fails the initial test, the manhole shall be repaired by an approved method until a satisfactory test is obtained.

ASTM C1244-05a$^{\epsilon 1}$

TABLE 1 Minimum Test Times for Various Manhole Diameters (30-72 in.) in seconds

Depth (ft)	Diameter, in.								
	30	33	36	42	48	54	60	66	72
	Time, in seconds								
<4	6	7	7	9	10	12	13	15	16
6	9	10	11	13	15	18	20	22	25
8	11	12	14	17	20	23	26	29	33
10	14	15	18	21	25	29	33	36	41
12	17	18	21	25	30	35	39	43	49
14	20	21	25	30	35	41	46	51	57
16	22	24	29	34	40	46	52	58	67
18	25	27	32	38	45	52	59	65	73
20	28	30	35	42	50	53	65	72	81
22	31	33	39	46	55	64	72	79	89
24	33	36	42	51	59	64	78	87	97
26	36	39	46	55	64	75	85	94	105
28	39	42	49	59	69	81	91	101	113
30	42	45	53	63	74	87	98	108	121

Deflection Test

An in-place deflection test shall be performed on all PVC gravity pipe by drawing a mandrel through each section of sewer. Long-term pipe deflection (reduction in vertical inside diameter) shall not exceed five percent. Mandrel and proving ring details shall be approved by the Engineer and shall be sized at five percent less than ASTM dimensions for the sewer pipe. This test shall be performed after the trench has been completely backfilled and adequate settlement of the area has occurred. To perform this test the mandrel is inserted into the pipe at the upstream manhole and slowly drawn through the line to the downstream manhole. When a constriction is encountered, the cord shall be pulled with a forced not to exceed 100 pounds until it can go not further. Location of the constriction shall be noted. The spindle shall be withdrawn to the upstream manhole and the section of pipe shall be excavated to correct the problem. When the area around the new pipe section has adequately settled, the deflection test shall be performed again along the entire section where the constriction occurred.

The Contractor shall use approved nine-arm mandrels and proving rings for each size of the mainline pipe. The contract length “L” of the mandrel arms and the actual mandrel diameter “D” (ID of the proving ring) shall equal the dimensions in the table below.

Critical mandrel dimensions shall carry a tolerance of +/- .01”.

Table 2. Nine Arm Mandrel – D Dimension

Nominal Diameter	Arm Length	Pipe Base Diameter	ASTM D3034 PVC SDR 35D
8”	8”	7.655”	7.27”
10”	10”	9.563”	9.08”
12”	12”	11.361”	10.79”
15”	15”	13.898”	13.20”

A – Base diameter is a minimum pipe inside diameter derived from subtracting a statistical tolerance package from the pipes inside diameter. The tolerance package is defined as the square root of the sum of squared standard manufacturing tolerances.

DETAILS

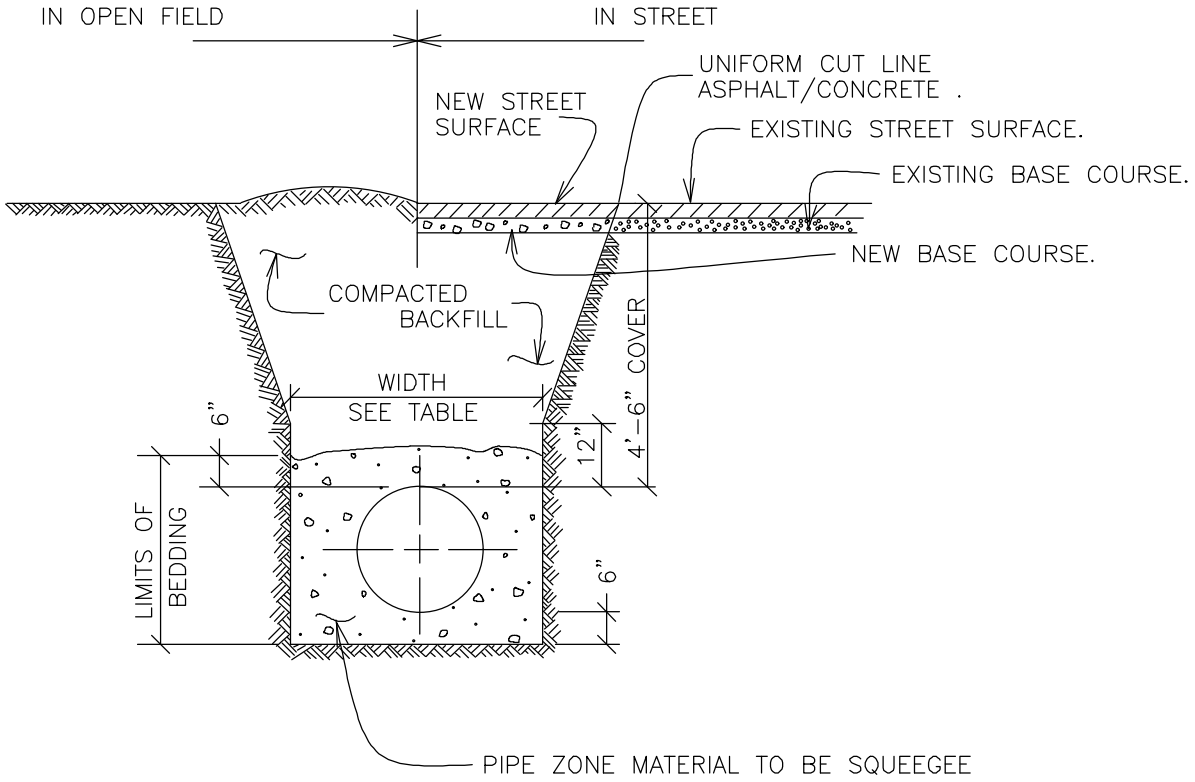

TYPICAL TRENCH SECTION

NOTES:
1. PAVING SHALL COMPLY WITH LOCAL AUTHORITY JURISDICTION.
2. TRENCH WALLS TO BE SUPPORTED AS REQUIRED BY O.S.H.A.
3. MINIMUM COVER TO BE BELOW OFFICIAL STREET GRADE.

PIPE DIAMETER	MINIMUM WIDTH	MAXIMUM WIDTH
4"	1'-4"	2'-4"
6"	1'-6"	2'-6"
8"	1'-8"	2'-8"
12"	2'-0"	3'-0"
16"	2'-4"	3'-4"
20"	2'-8"	3'-8"
24"	4'-0"	5'-0"

BEAR CREEK WATER & SANITATION DISTRICT

TYPICAL TRENCH SECTION & BEDDING DETAIL

Scale: None	Date: February 2019
Drawn: LDL	Ck: BJF
Approved: Barney J. Fix	

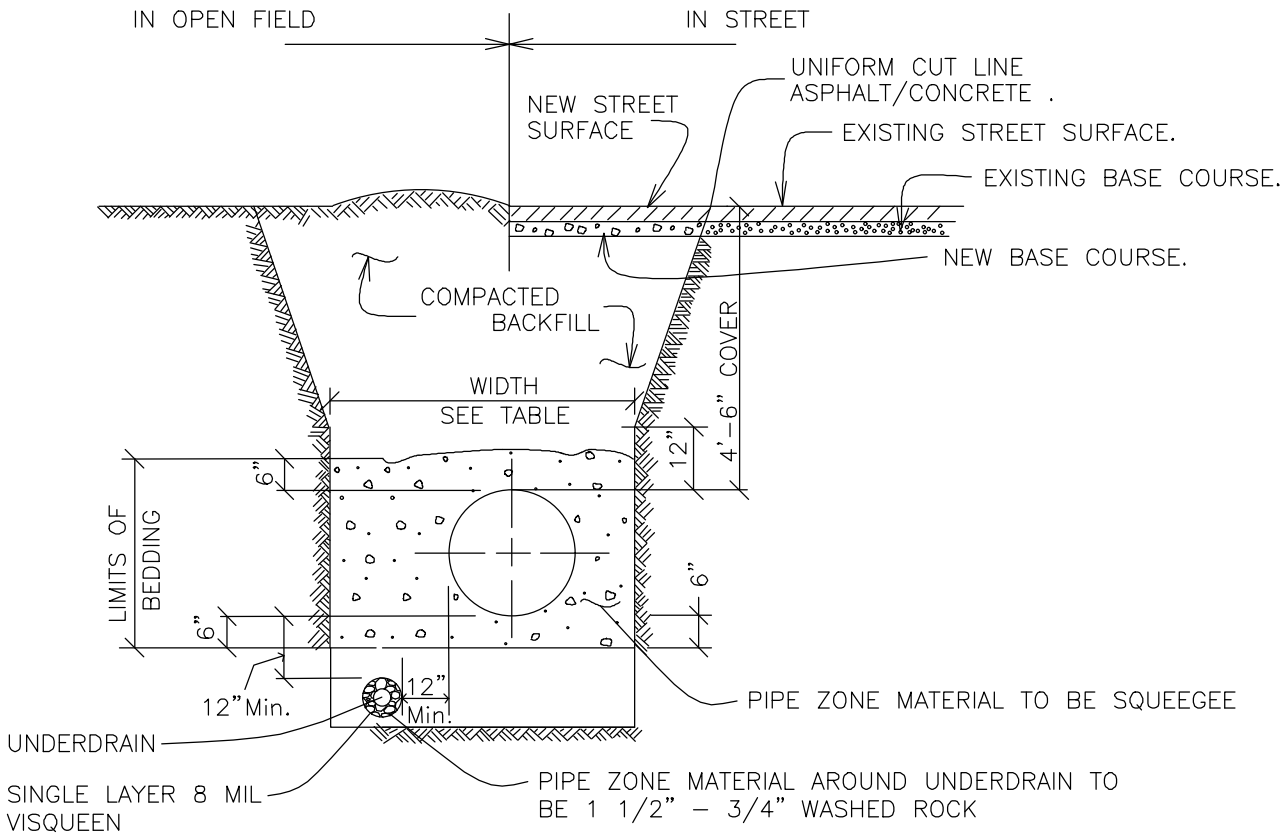

TYPICAL TRENCH SECTION W/UNDERDRAIN

NOTES:
1. PAVING SHALL COMPLY WITH LOCAL AUTHORITY JURISDICTION.
2. TRENCH WALLS TO BE SUPPORTED AS REQUIRED BY O.S.H.A.
3. MINIMUM COVER TO BE BELOW OFFICIAL STREET GRADE.

PIPE DIAMETER	MINIMUM WIDTH	MAXIMUM WIDTH
4"	1'-4"	2'-4"
6"	1'-6"	2'-6"
8"	1'-8"	2'-8"
12"	2'-0"	3'-0"
16"	2'-4"	3'-4"
20"	2'-8"	3'-8"
24"	4'-0"	5'-0"

BEAR CREEK WATER & SANITATION DISTRICT

TYPICAL TRENCH SECTION & BEDDING DETAIL WITH UNDERDRAIN

Scale: None		Date: February 2019	
Drawn: LDL			Ck: BJF
Approved: Barney J. Fix			

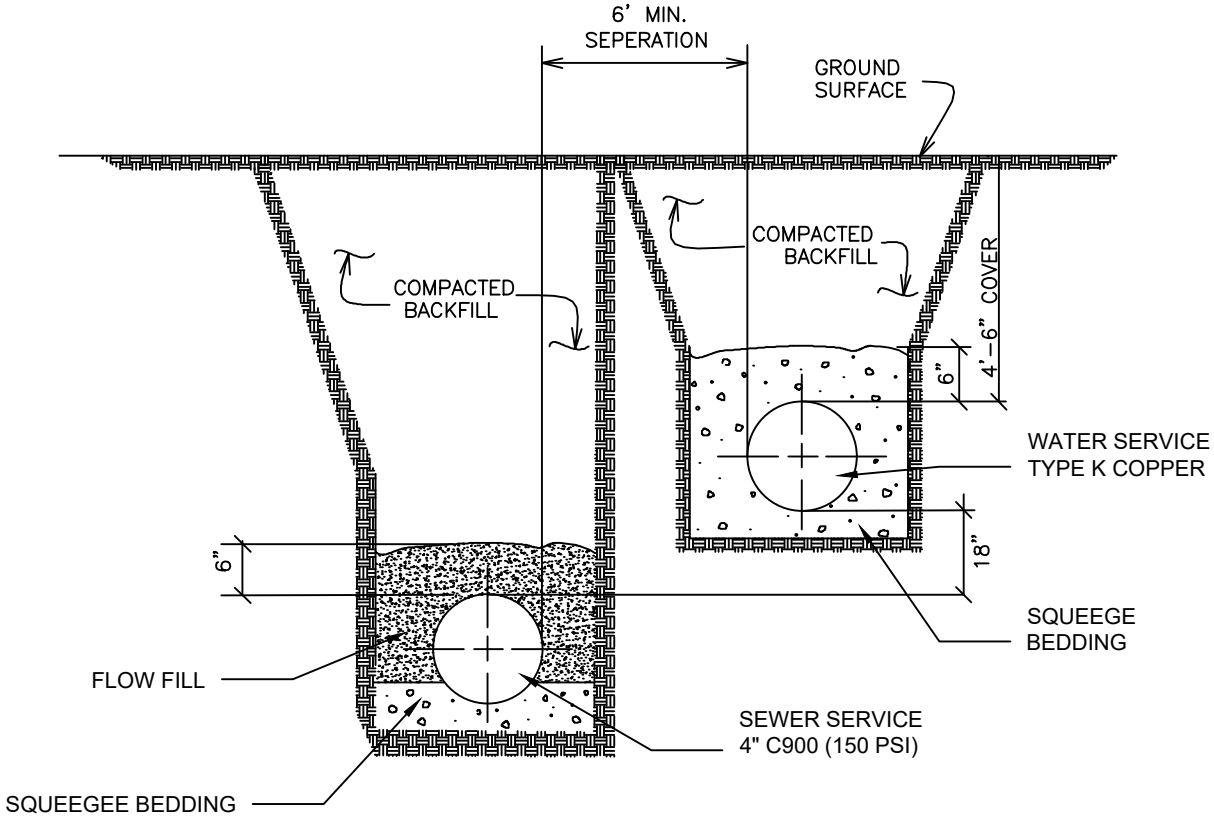

BEAR CREEK WATER & SANITATION DISTRICT	
WATER/SEWER SERVICE LINE TRENCH (LESS THAN 10 FEET SEPARATION)	
Scale: None	Date: October 2018
Drawn: LDL	Ck: BJF
Approved: Barney J. Fix	

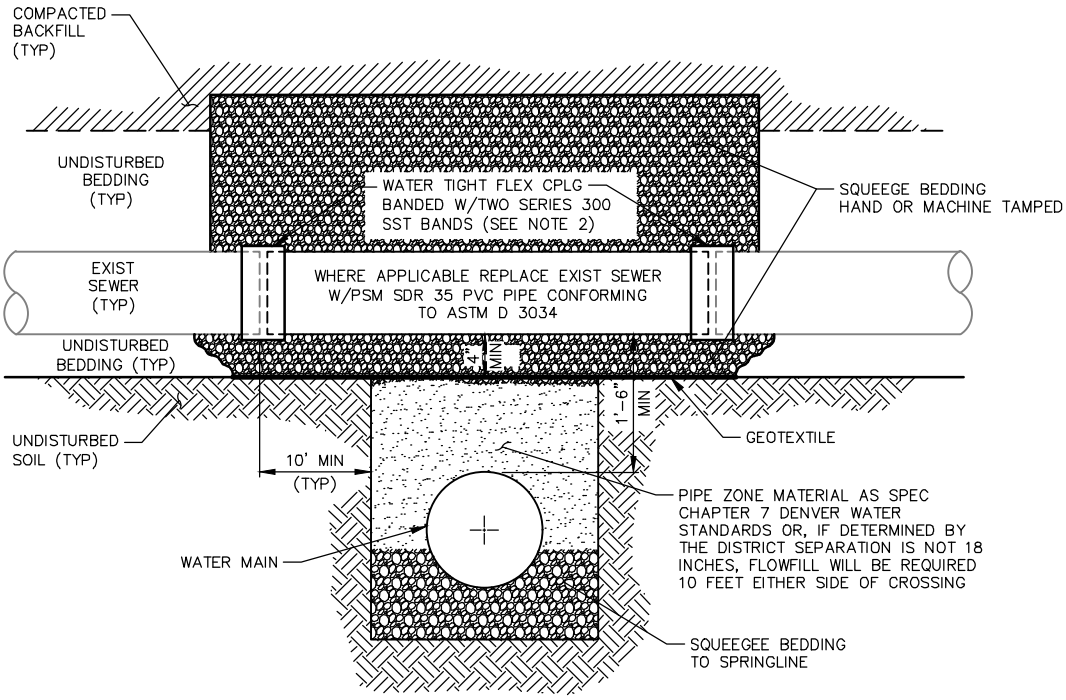

SEWER CROSSING OVER

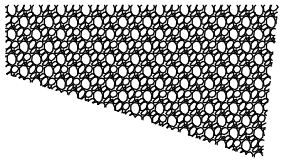

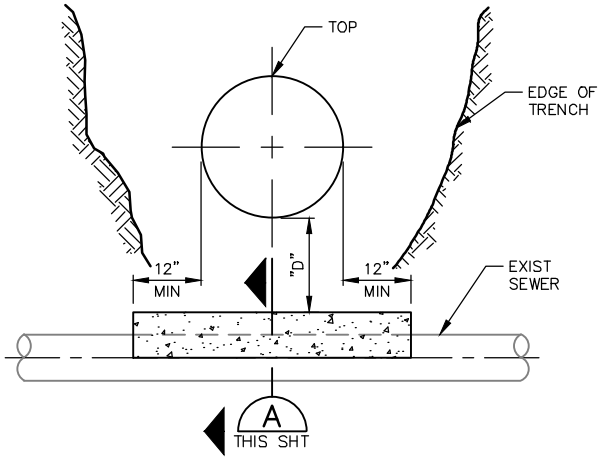

SEWER CROSSING UNDER

WITH "D" LESS THAN 2'

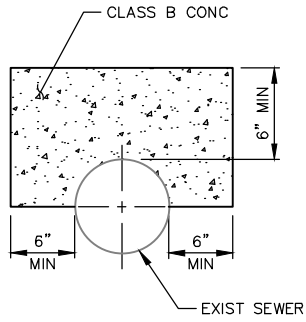

SECTION A

THIS SHT

NOTES:

1. ANY EXISTING SEWER DAMAGED DURING INSTALLATION MUST BE REPLACED WITH PVC PIPE.
2. IN THE BANCROFT–CLOVER W&S DISTRICT, APPROVED FLEX COUPLING SHALL BE USED: FERNCO 5000 SERIES REPAIR COUPLING, MISSION FLEX–SEAL ADJUSTABLE REPAIR COUPLING, ONSET SHEAR GUARD.
3. ANY SUBDRAIN UNDER THE SEWER SHALL BE REPLACED SUCH THAT NO FLOW SHALL ENTER THE WATER LINE TRENCH.
4. SEWER PIPE MUST BE A STRUCTURAL PIPE MATERIAL WITHIN 10' EITHER SIDE OF CROSSING.
5. SEWER PIPE JOINTS WITHIN 10' EITHER SIDE OF CROSSING MUST BE ENCASED IN A CONCRETE COLLAR.

BEAR CREEK WATER & SANITATION DISTRICT			
STORM & SANITARY SEWER CROSSING			
Scale:	None	Date:	April 2020
Drawn:	LDL	Ck:	BJF
Approved:	Barney J. Fix		

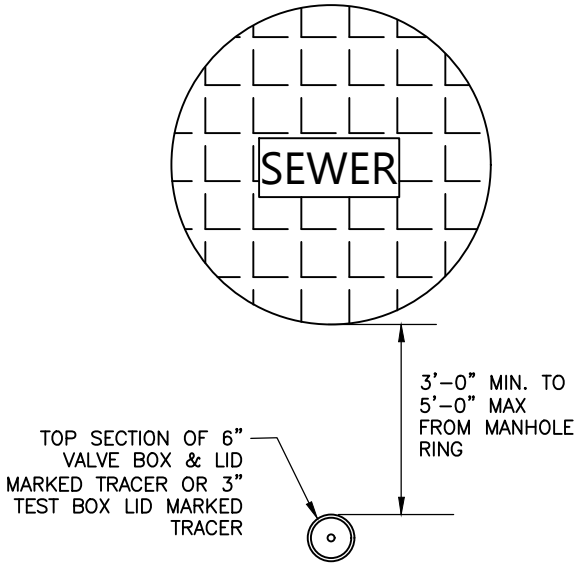

PLAN VIEW

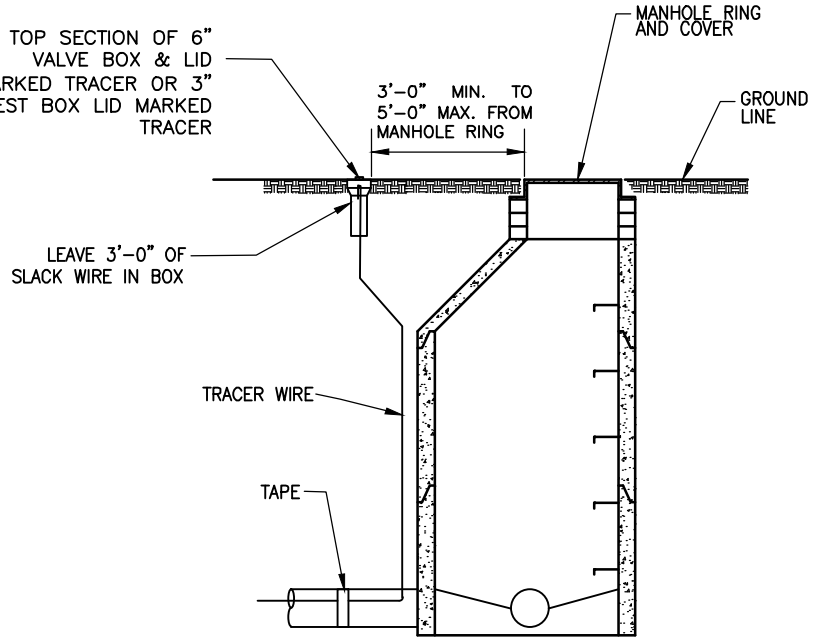

ELEVATION VIEW

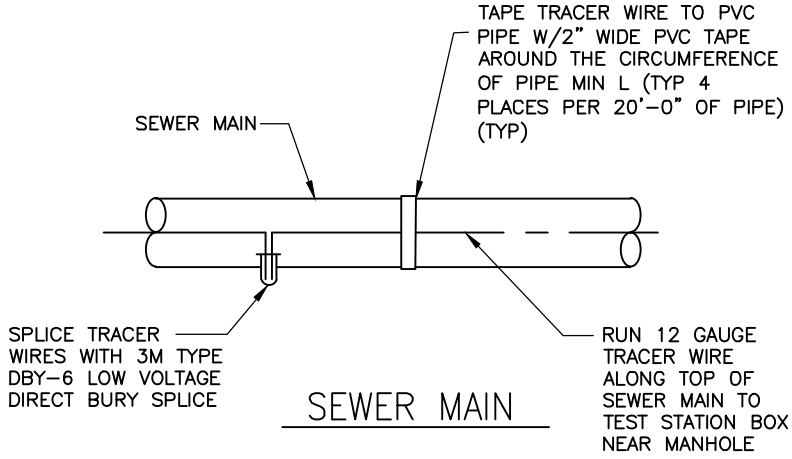

SEWER MAIN

BEAR CREEK WATER & SANITATION DISTRICT	
TRACER WIRE INSTALLATION FOR PVC SANITARY SEWER MAIN	
Scale: None	Date: April 2020
Drawn: LDL	Ck: BJF
Approved: Barney J. Fix	

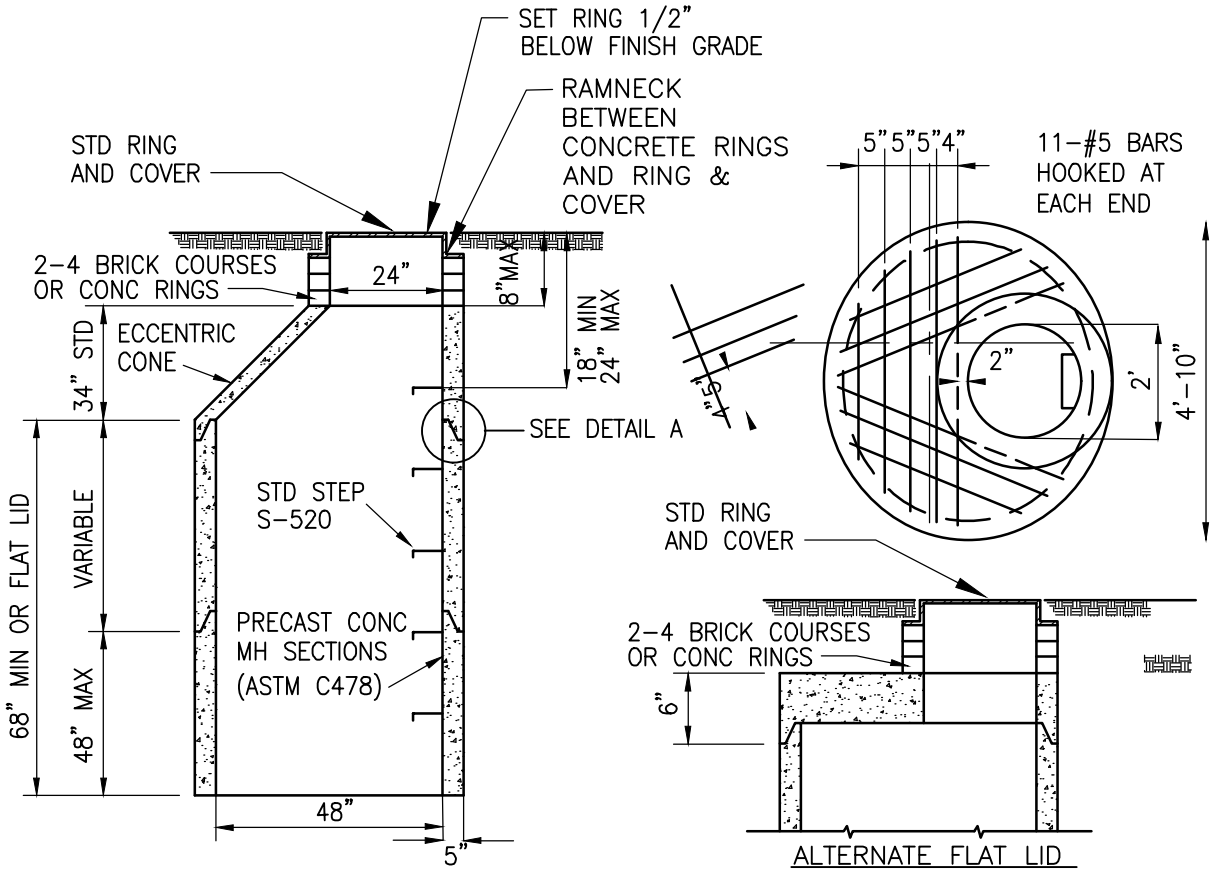

NOTES:

1. 48"DIA MANHOLES SHALL HAVE A 24" STANDARD RING AND COVER, J-MARK NO. J-1161 OR APPROVED EQUAL.
2. THE WORD "SEWER" SHALL BE BOLDLY CAST ON ALL COVERS.
3. SET 24" MANHOLE RIM AND COVER 1/2" BELOW FINISH GRADE ALL MANHOLES. (TYPICAL FOR ALL APPLICATIONS UNLESS OTHERWISE DETAILED.
4. MORTAR SHALL COVER THE LEVELING COURSES AND RING TO WITHIN 1" FROM THE SURFACE, AND SHALL BE USED ON THE INSIDE OF THE BARREL AT THE JOINTS.
5. RING/COVER & BRICK SHALL BE SET ON A FULL BED OF MORTAR (TYPE II CEMENT TYPICAL).
6. WHEN THE DISTANCE BETWEEN SEWER THE INVERT AND RIM IS LESS THAN 8.5' A FLAT TOP MANHOLE SHALL BE CONSTRUCTED.
7. FLAT TOPS SHALL BE CAPIABLE OF WITHSTANDING H-20 LOADS.
8. ALL MANHOLES IN EXCESS OF 20' IN DEPTH SHALL HAVE AN INTERMEDIATE GRATING LOCATED AT THE CENTER OF DEPTH.
9. CONCENTRIC CONES ARE NOT ALLOWED.
10. ALL PRECAST MANHOLE SECTIONS, FLAT TOPS, BARRELS, REDUCERS, ECT. SHALL CONFORM TO ASTM C-478.
11. ALL MANHOLE BARRELS, CONES, FLAT TOP SECTIONS AND RINGS SHALL INDICATE DATE MANUFACTURED, SIZE, AND ASTM C-478.
12. AN APPROVED FLEXIABLE PLASTIC SEALENT IS REQUIRED IN SHIPLAP JOINTS BETWEEN FLAT TOP BARREL SECTIONS, CONE SECTIONS, ETC.
13. ALL MORTOR AND GROUT SHALL BE TYPE II CEMENT.
14. MANHOLE STEPS SHALL NOT BE INSTALLED OVER THE FLOW CHANNEL, THEY SHALL BE PLACED 12" MINIMUM OR 16" MAXIMUM IN STRAIGHT VERTICAL ALLIGNMENT WITH THE BOTTOM STEP 8" ABOVE THE BENCH MINIMUM. SEE DENVER WASTE WATER STANDARD DETAIL S-750 AND S-502.
15. DISTRICT MAY INCREASE MH SIZE FOR SPECIAL DESIGN CONSIDERATIONS.

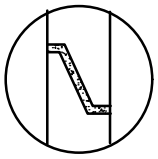

FLEXIBLE PLASTIC JOINT MATERIAL (K.T. SNYDER "RAM-NEK" OR APPROVED EQUAL)

DETAIL A

BEAR CREEK WATER & SANITATION DISTRICT	
STANDARD SANITARY SEWER MANHOLE DETAIL	
Scale: None	Date: May 2020
Drawn: LDL	Ck: BJF
Approved: Barney J. Fix	

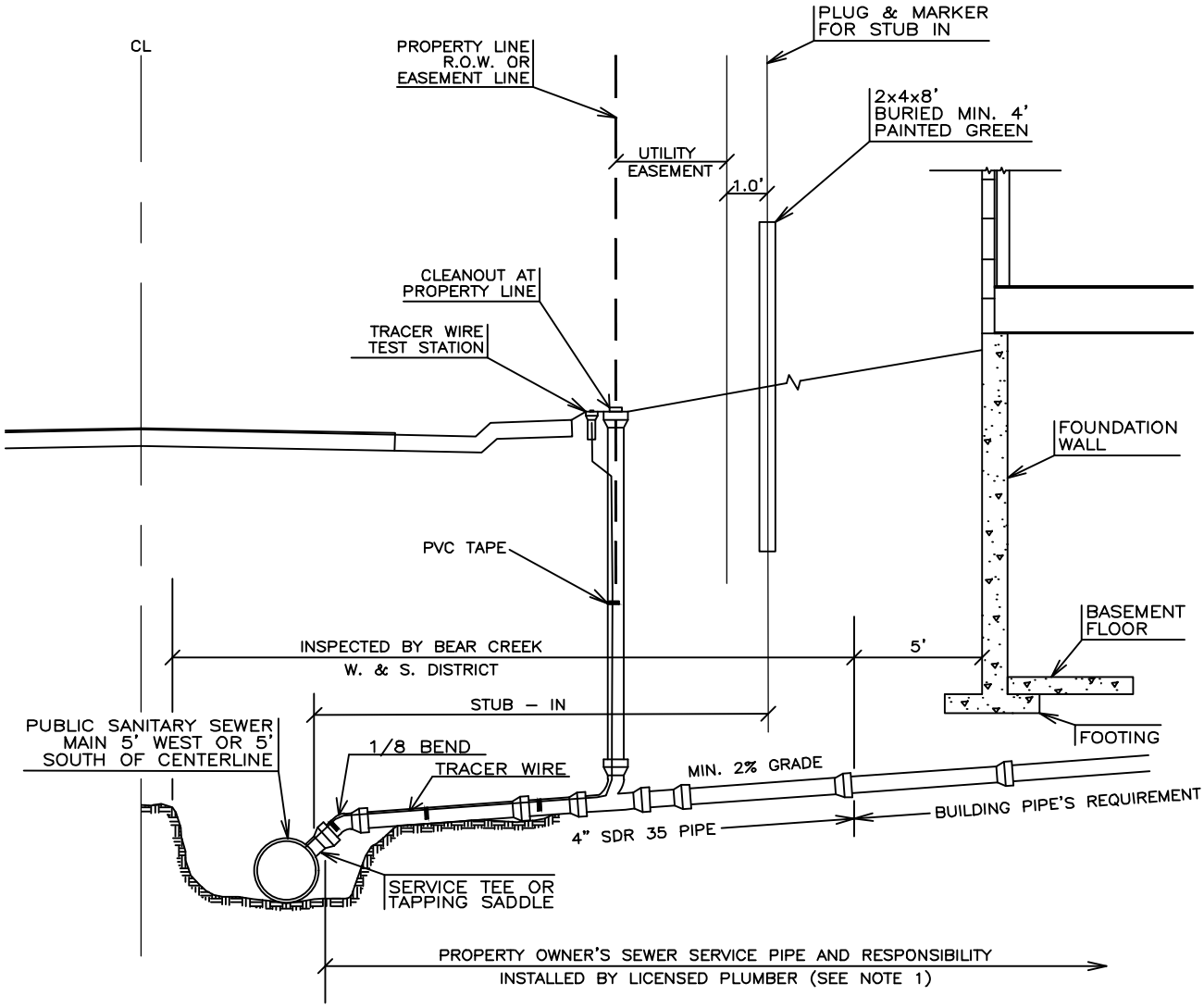

NOTE 1: WHEN SERVICE IS CONNECTED WITH A TEE, THE DISTRICT'S RESPONSIBILITY INCLUDES THE TEE; WHEN SERVICE IS WITH A HAMMER TAP OR HARD TAP THE DISTRICT IS RESPONSIBLE FOR THE HOLE ONLY.

NOTE 2: STUB–IN TO END AT R.O.W./PROPERTY LINE WHEN NO UTILITY EASEMENT EXISTS.

NOTE 3: 12 GAUGE TRACER WIRE TO BE INSTALLED ON SERVICE LINE UP TO CLEANOUT AT PROPERTY LINE.

BEAR CREEK WATER & SANITATION DISTRICT			
SEWER SERVICE LINE INSTALLATION			
Scale:	None	Date:	April 2020
Drawn:	LDL	Ck:	BJF
Approved:	Barney J. Fix		

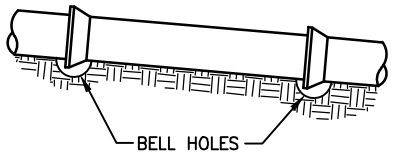

ACCEPTABLE BEDDING

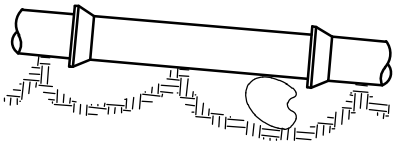

UNACCEPTABLE BEDDING

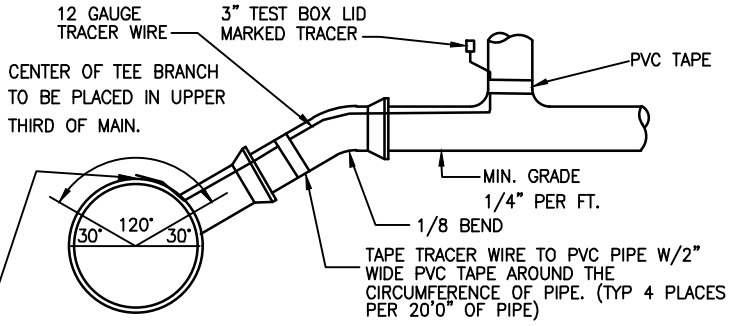

1/8 BEND CONNECTION TO TEE (FOR MAIN LINE CONSTRUCTION)

SPLICE TO TRACER WIRE ON PIPE W/3M TYPE DBY-6 LOW VOLTAGE DIRECT BURY SPLICE. IF NO TRACER WIRE ON PIPE, THEN DEAD END WIRE AT CENTER TOP OF PIPE

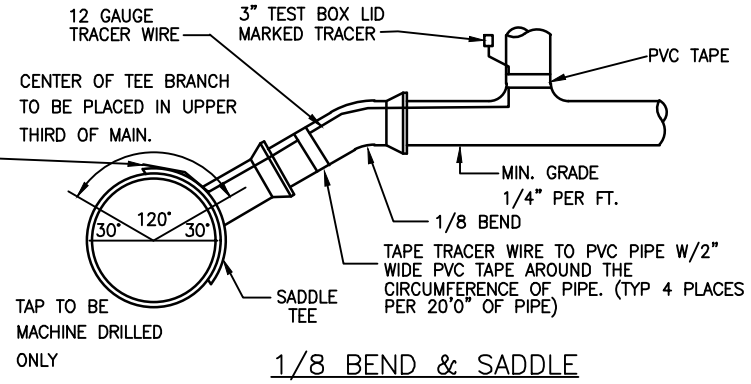

1/8 BEND & SADDLE CONNECTION (FOR EXISTING MAIN LINES)

NOTES:

1. BELLS SHALL NOT TOUCH THE SIDES OR BOTTOM OF THE BELL HOLE.
2. THE BARREL SECTION SHALL BE SUPPORTED THROUGHOUT ITS LENGTH.
3. SERVICE TAPS SHALL BE IN-LINE TEE OR MACHINE TAPPED. HAND TAPS SHALL NOT BE ALLOWED.
4. SERVICE LINES SHALL BE LOCATED 5' DOWNHILL FROM CENTERLINE OF THE LOT AND A MINIMUM OF 10' FROM THE WATER SERVICE LINE.
5. THE MIN. SERVICE LINE GRADE SHALL BE 1/4" PER FT.
6. JOINTS SHALL BE WATER TIGHT.
7. WHEN SERVICE STUB-INS ARE INSTALLED WITH THE SEWER MAIN, THEY SHALL BE EXTENDED AT LEAST TO PROPERTY LINE AND SHALL BE PLUGGED. THE STUB SHALL BE MARKED WITH A 2x4 MARKER FOR LOCATION END.

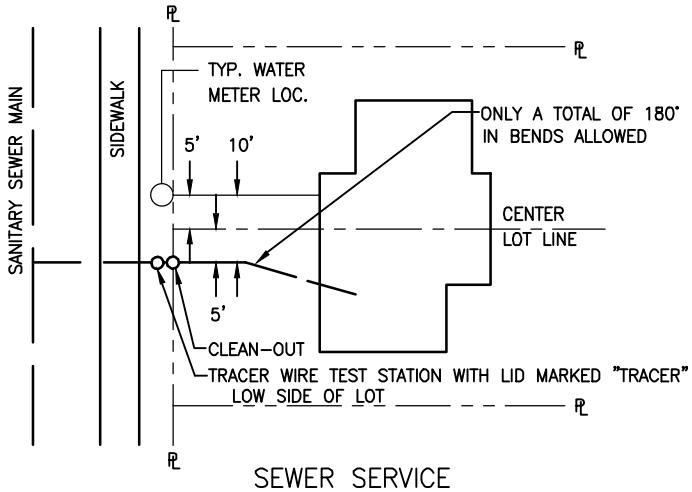

SEWER SERVICE

BEAR CREEK WATER & SANITATION DISTRICT	
STANDARD SEWER SERVICE LINE CONNECTION	
Scale: None	Date: December 2018
Drawn: LDL	Ck: BJF
Approved: Barney J. Fix	

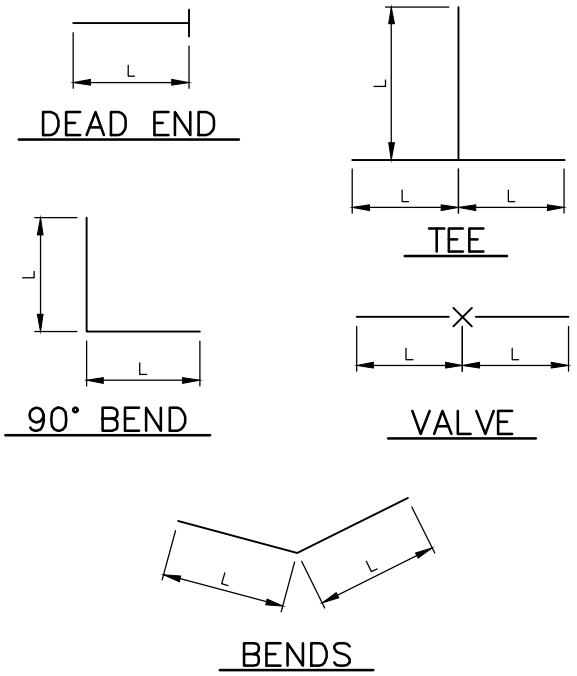

ROD DIAMETER, GRADE & LENGTH OF RESTRAINED PIPE

NOMINAL PIPE ø	4"	6"	8"	12"	16"	20"	24"
FITTING	L	L	L	L	L	L	L
90° BEND, TEE, DEAD END	30'	45'	60'	86'	108'	132'	155'
VALVE	30'	45'	60'	86'	108'	132'	155'
45° BEND	9'	13'	18'	25'	32'	39'	45'
22 1/2° BEND	2'	4'	5'	7'	8'	10'	12'
11 1/4° BEND	2'	2'	2'	2'	2'	3'	3'

NOTES:

1. LENGTH OF RESTRAINED PIPE MEASURED EACH WAY FROM VALVES AND BENDS.
2. MINIMUM 4.5' GROUND COVER REQUIRED.
3. BASED ON 150 POUNDS PER SQUARE INCH WORKING PRESSURE.
4. CROSSES MUST BE RESTRAINED IN ALL DIRECTIONS.
5. WHEN REDUCERS ARE USED ON A VALVE INSTALLATION THE LENGTH OF RESTRAINT SHALL BE BASED ON THE SIZE OF THE PIPE NOT THE SIZE OF THE VALVE.

BEAR CREEK WATER & SANITATION DISTRICT

LENGTH OF RESTRAINED PIPE

Scale:	None	Date:	April 2020
Drawn:	LDL	Ck:	BJF
Approved:	Barney J. Fix		

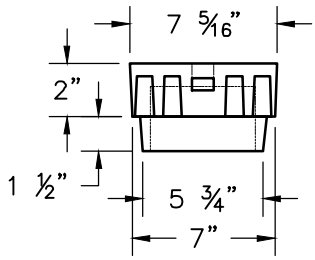

5 1/4" DROP LID

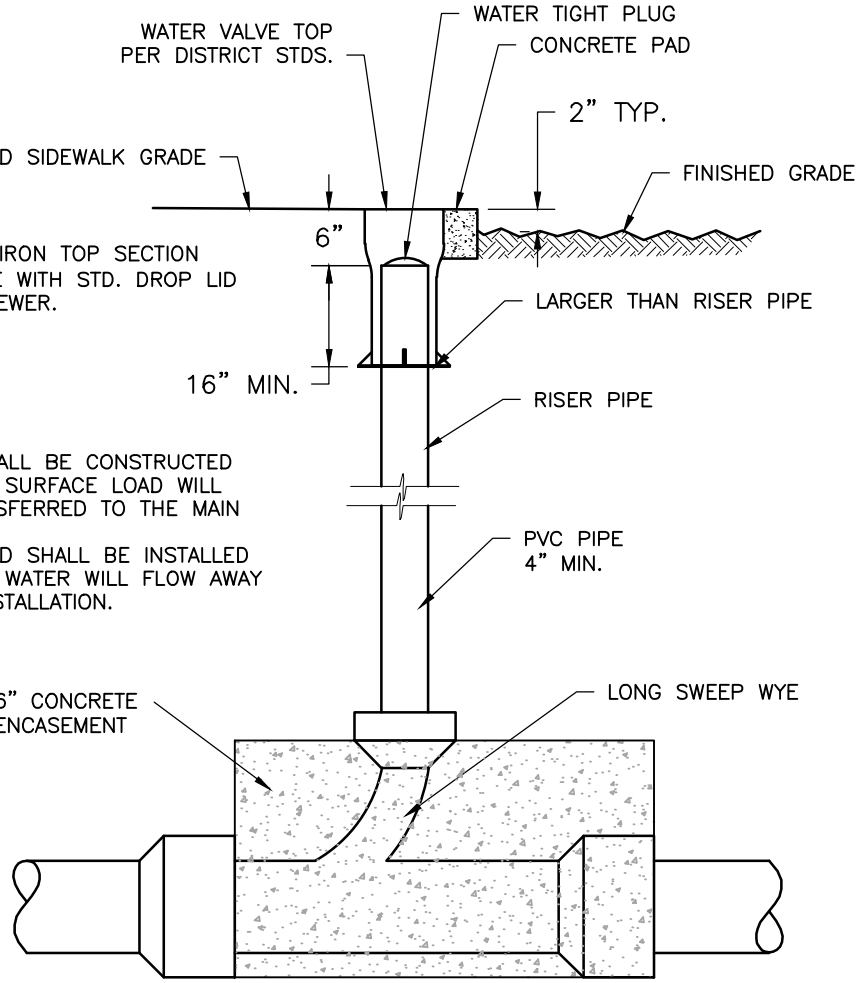

NOTES:

1. CLEANOUT SHALL BE CONSTRUCTED SO THAT THE SURFACE LOAD WILL NOT BE TRANSFERRED TO THE MAIN

2. CONCRETE PAD SHALL BE INSTALLED SO THAT THE WATER WILL FLOW AWAY FROM THE INSTALLATION.

BEAR CREEK WATER & SANITATION DISTRICT	
SANITARY SEWER CLEANOUT DETAIL	
Scale: None	Date: January 2019
Drawn: LDL	Ck: BJF
Approved: Barney J. Fix	

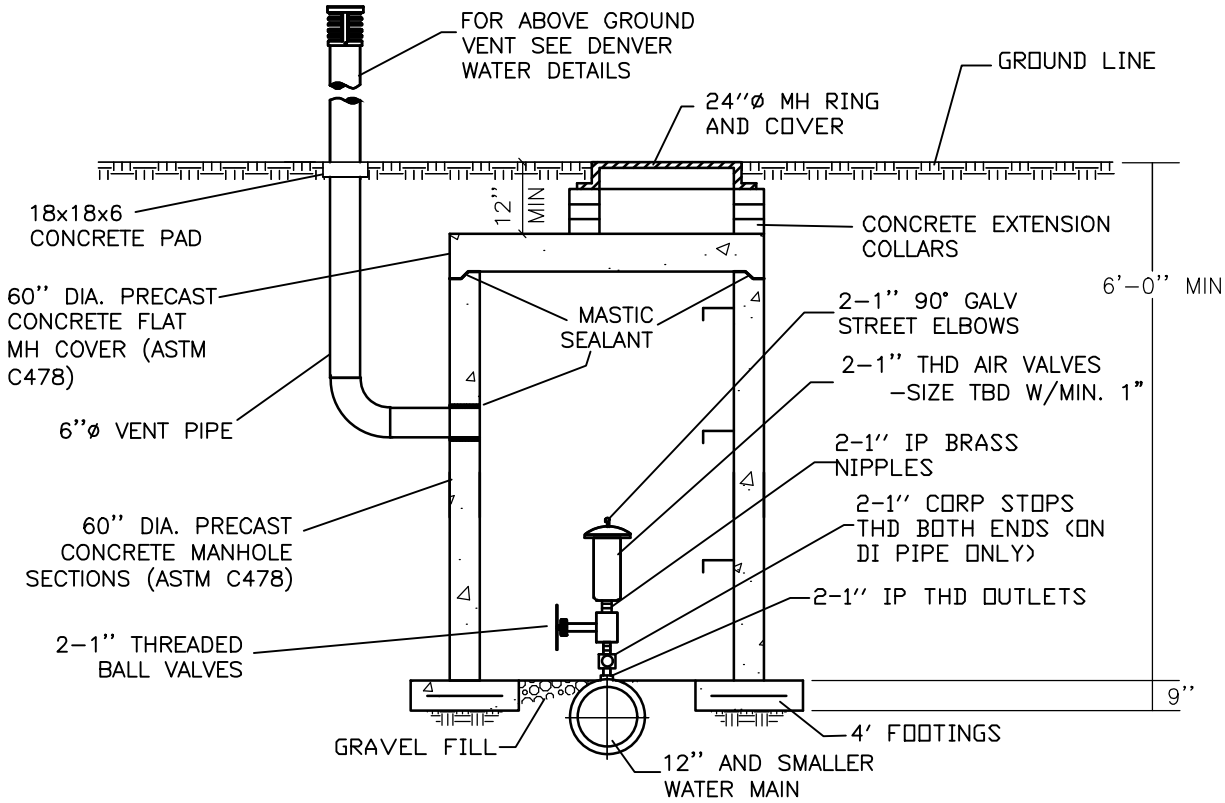

ELEVATION

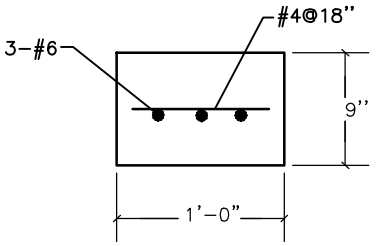

FOOTING DETAIL

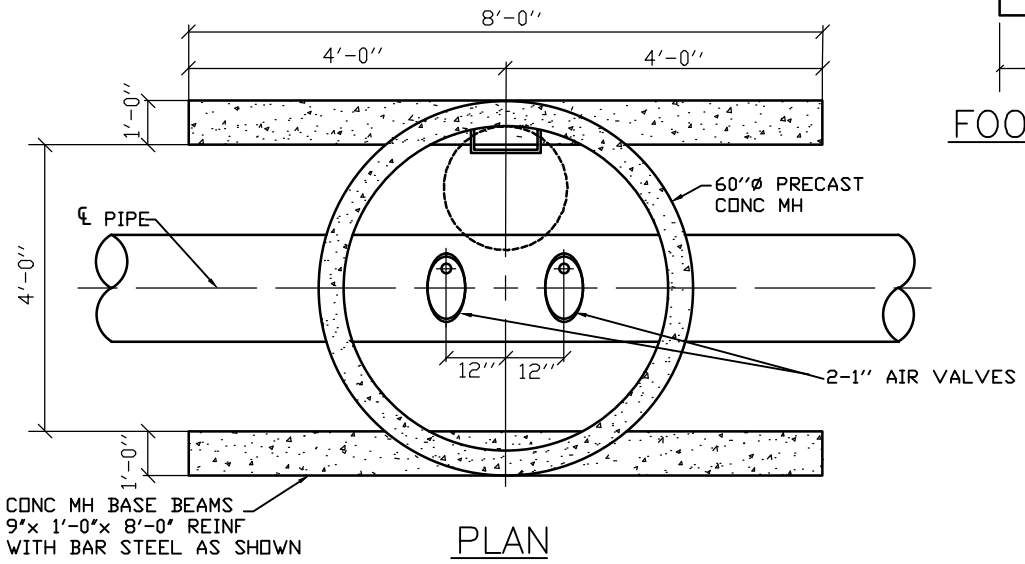

PLAN

NOTES:

1. THE DISTANCE BETWEEN RUNGS, CLEATS, AND STEPS SHALL NOT EXCEED 12 INCHES AND SHALL BE UNIFORM THROUGHOUT THE LENGTH OF THE LADDER.
2. DETAIL IS SHOWN WITH ONE INCH, SIZE WILL NEED TO BE VERIFIED DURING DESIGN.
3. LADDER RUNGS ARE REQUIRED IN PRECAST CONC MH.
4. FOR MH INFORMATION SEE DENVER WATER STANDARDS
5. MINIMUM SIZE OF AIR VALVES IS 1 INCH

BEAR CREEK WATER & SANITATION DISTRICT			
1" AIR VALVE ASSEMBLY ON 12" AND SMALLER DISTRIBUTION LINES			
Scale:	None	Date:	April 2020
Drawn:	LDL	Ck:	BJF
Approved:	Barney J. Fix		

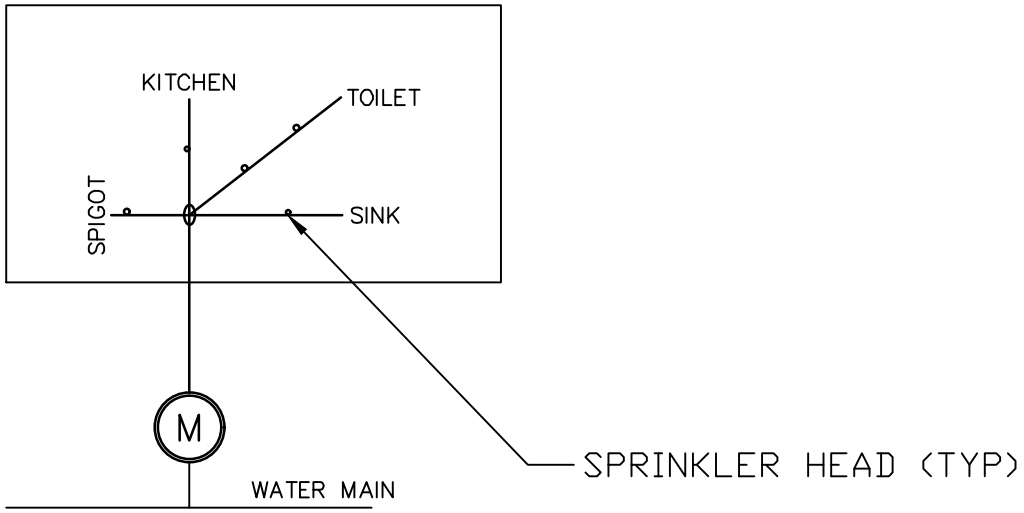

OPTION 1

MULTI-PURPOSE PIPING SYSTEM

NOTES:

1. MULTI-PURPOSE PIPING SYSTEM TO MEET NFPA 13D REQUIREMENTS.

BEAR CREEK WATER & SANITATION DISTRICT			
NFPA 13D – RESIDENTIAL SPRINKLER SERVICES			
Scale: None		Date: April 2020	
Drawn: LDL		Ck: BJF	
Approved: Barney J. Fix			

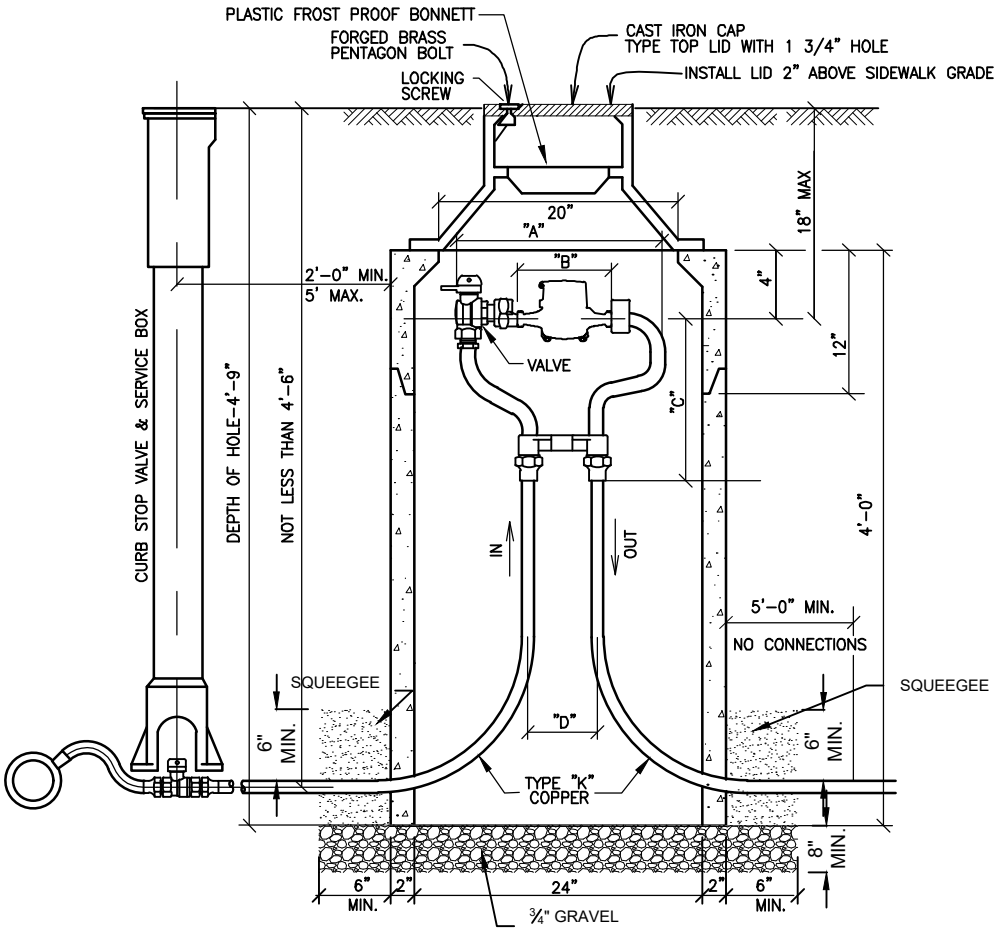

GENERAL NOTES:

1. NOT FOR INSTALLATION IN ROADWAYS, DRIVEWAYS, SIDEWALKS, OR PARKING AREAS.
2. IF SURFACE IS NOT TO FINAL GRADE AT TIME OF INSTALLATION OF METER, OWNER MUST RAISE OR LOWER PIT BY SINGLE CONCRETE RING WHEN SURFACE IS GRADED.
3. METER SETTING MUST BE INSPECTED BY CUSTOMER SERVICES BEFORE BACKFILLING.
4. LOCATION OF METER TO BE ESTABLISHED BY METER DEPT.
5. NO CONCRETE FLOOR TO BE LAID IN METER PIT
6. METER PIT SHALL BE CONSTRUCTED OF FOUR 12", OR ONE 12" AND ONE 36" RINGS. WALLS SHALL BE 2" THICK.
7. ADJUSTMENT RINGS SHALL BE 2", 3", 4", OR 6" IN HEIGHT AND SHALL BE INSERTED BETWEEN THE TWO TOP RINGS. ONLY ONE ADJUSTMENT RING IS ALLOWED.
8. NO IRRIGATION CONNECTIONS SHALL BE MADE IN THE METER PIT.
9. LAWN SPRINKLER CONNECTIONS SHALL BE A MINIMUM OF FIVE FEET (5') FROM THE METER PIT WALL ON THE OUTLET SIDE.

METER SIZE	A	B	C	D
5/8 x 3/4"	12-5/8"	7-13/16"	7-13/16"	4"
3/4"	14-1/4"	9-5/16"	8-15/16"	5"
1"	17-1/4"	11-1/16"	11-1/4"	6"

BEAR CREEK WATER & SANITATION DISTRICT

OUTSIDE METER SETTING ¾" AND 1"

Scale: None	Date: April 2020
Drawn: LDL	Ck: BJF
Approved: Barney J. Fix	

NOTES:

1. PLACEMENT OF THE STOP BOX CAN VARY FROM A MAXIMUM OF 5 FEET OUTSIDE THE PROPERTY LINE TO A MINIMUM OF 5 FEET INSIDE THE PROPERTY LINE. PLACEMENT OF THE STOP BOX OUTSIDE THE PROPERTY LINE IS PREFERED.

2. OWNER'S RESPONSIBILITY FOR REPAIR, INCLUDING LEAK REPAIR, SHALL EXTEND TO THE CORPORATION STOP.

3. DENVER WATER TO MAKE TAPS 2" AND SMALLER. DENVER WATER TO INSTALL METER.

4. SERVICE LINE INCLUDING METER PIT TO BE INSPECTED BY BEAR CREEK INSPECTOR AND DENVER WATER.

5. IF THERE IS A TREE LAWN, BOTH CURB STOP AND METER PIT MUST BE LOCATED BETWEEN CURB AND SIDEWALK.

6. STOP BOX SHALL BE LOCATED IN LANDSCAPE AREA, 24" FROM THE INLET SIDE OF THE METER PIT.

7. NO BENDS, FITTINGS, CONNECTIONS, OR CHANGES IN PIPE SIZE ARE PERMITTED BETWEEN THE TAP AND 5 FEET PAST THE METER PIT.

SHOULD ANY SITUATION ARISE OTHER THAN SHOWN CONCERNING THE DEPTH OR OBSTRUCTION OF SERVICE LINE OR THE PLACEMENT OF METER PIT OR STOP BOX CALL FIELD INSPECTOR OR FIELD SUPERVISOR.

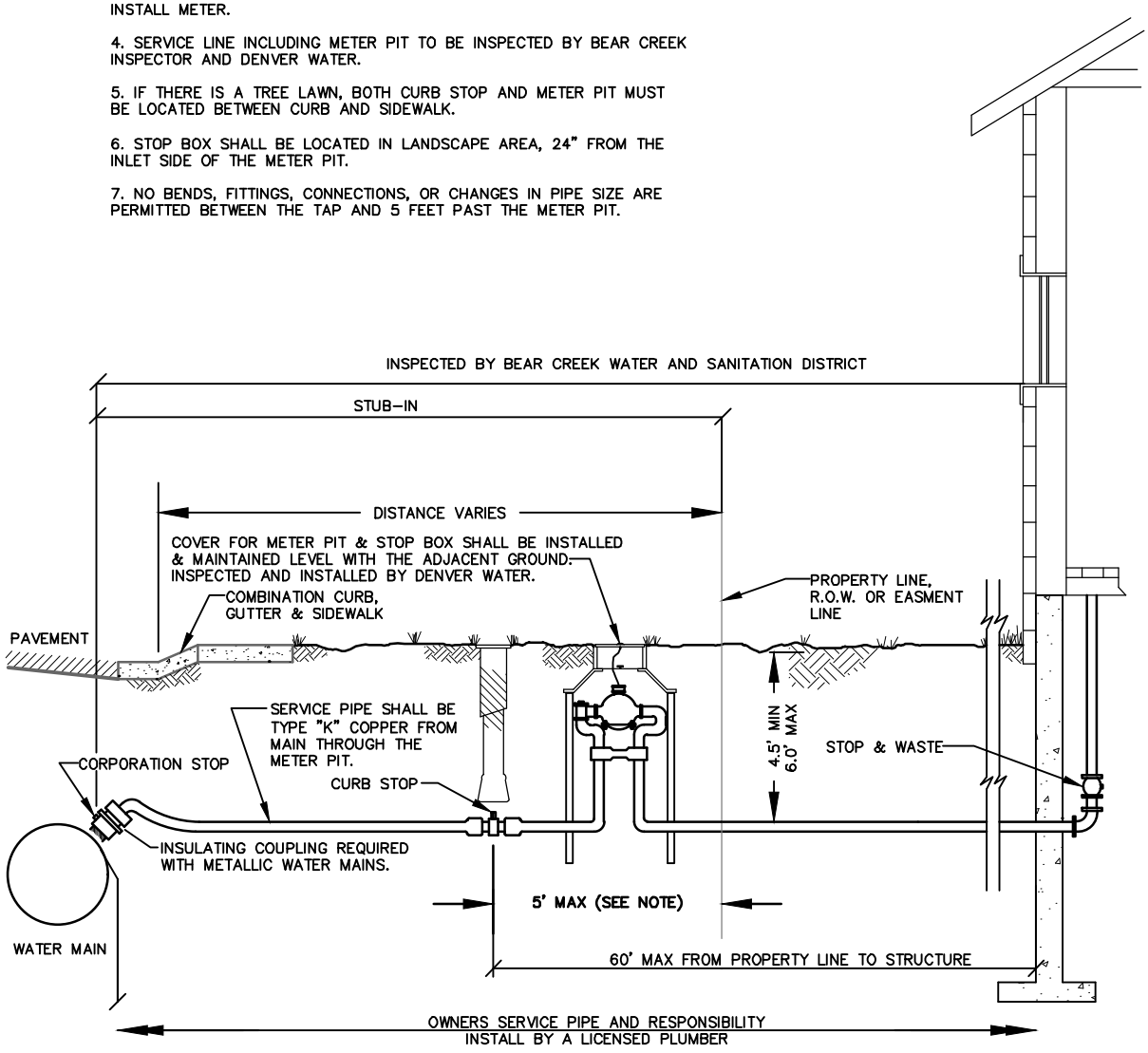

BEAR CREEK WATER & SANITATION DISTRICT	
WATER SERVICE LINE ¾" AND 1"	
Scale: None	Date: April 2020
Drawn: LDL	Ck: BJF
Approved: Barney J. Fix	

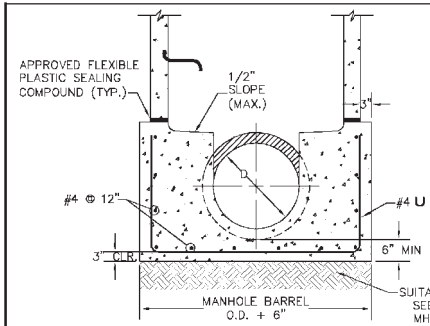

A 7/7 SECTION

PLAN STM. MH (TYPE C)

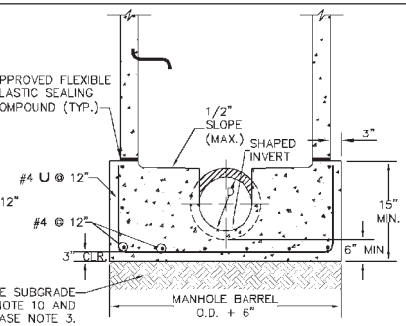

B 7/7 SECTION

PLAN SAN. MH (TYPE A)

f'_c = 4500 PSI
f_y = 60,000 PSI

TABLE I

PIPE DIAMETER	MH-BARREL DIAMETER
30" OR LESS	4'
33" – 36"	5'

NO SCALE

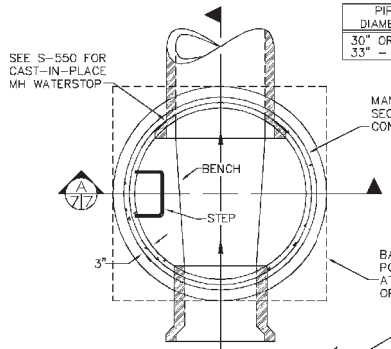

NO SCALE

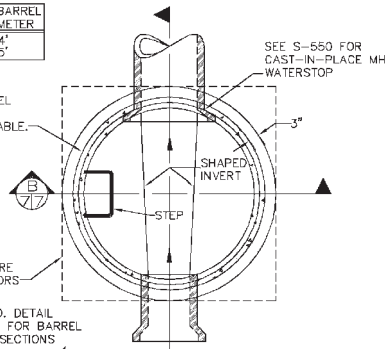

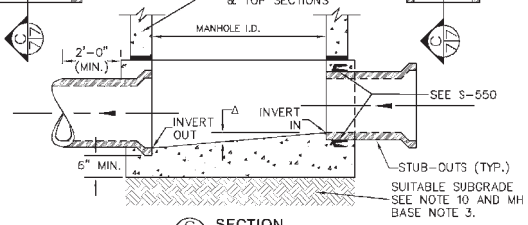

C 7/7 SECTION

CAST -IN-PLACE MANHOLE BASE

NO SCALE

NOTES:
1. MANHOLE BARREL MINIMUM DIAMETER SHALL CONFORM TO TABLE I.
2. GROUTED FLOW CHANNELS AND INVERTS MAY BE FORMED BY SHAPING WITH LEAN CONCRETE (f'_c=2000 PSI MIN.).
3. MANHOLE STEPS SHALL CONFORM TO DIVISION SPECIFICATIONS AND WMD STANDARD DETAILS S-750.
4. ALL DEAD END MANHOLES SHALL BE STUBBED THRU AT 0.40% MINIMUM SLOPE.
5. STUB-OUTS SHALL EXTEND 2'-0" MIN. PAST MANHOLE O.D. AND BE FACTORY PLUGGED.
6. REINFORCING IS REQUIRED FOR ALL MANHOLE BASES.
7. SLOPE MANHOLE BENCH 1/2" MAXIMUM TOWARD FLOW CHANNEL.
8. Δ=INVERT DROP THRU MANHOLE. FOR SANITARY SEWERS, IF Δ≥18", AN OUTSIDE DROP MANHOLE IS REQUIRED (S-530).
9. SHIPLAP JOINTS ON MANHOLE BARREL RISER SHALL CONFORM TO DIVISION STANDARDS AND SPECIFICATIONS (S-401).
10. CAST IN PLACE MANHOLE BASES SHALL BE PLACED ON SUITABLE SUBGRADE MATERIAL. AT THE DIRECTION OF THE ENGINEER THE SUBGRADE SHALL BE OVEREXCAVATED AND STABILIZED WITH AN ACCEPTABLE GRANULAR MATERIAL, COMPACTED TO 95% OF MAXIMUM DRY DENSITY IN ACCORDANCE WITH AASHTO T-180.
11. ALL PIPE OPENINGS SHALL BE CONSTRUCTED WITH AN APPROVED FLEXIBLE WEDGE-TYPE GASKET CONFORMING TO ASTM C-443 WHICH SHALL BE CAPABLE OF PROVIDING A WATER TIGHT JOINT WITH ZERO LEAKAGE AROUND THE INSTALLED PIPE. CONCRETE TO CONCRETE DONE WITHOUT WATER STOP GASKET FOR STORM SEWER WILL BE AT THE DISCRETION OF THE CITY ENGINEER (SEE S-550). AN APPROVED FLEXIBLE BOOT TYPE SLEEVE MAY ALSO BE USED FOR PRECAST INSTALLATIONS.
12. PRECAST BARREL SECTIONS, CONES, RISERS, ETC. SHALL CONFORM TO ASTM C-478, LATEST REVISION.

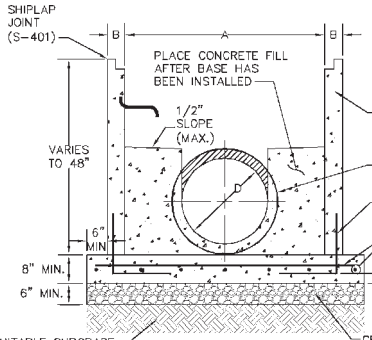

TABLE H

A	48"	60"	72"
B	5"	6"	7"

WELDED WIRE REINFORCING AS PER ASTM C-478

FLEXIBLE RUBBER WEDGE-TYPE GASKET (S-550)

6-#4 DOWELS (MIN.) SEE TYP. DOWEL

#4 @ 12",E.W.

SUITABLE SUBGRADE SEE NOTE 10 AND MH BASE NOTE 3.

D 7/7 SECTION

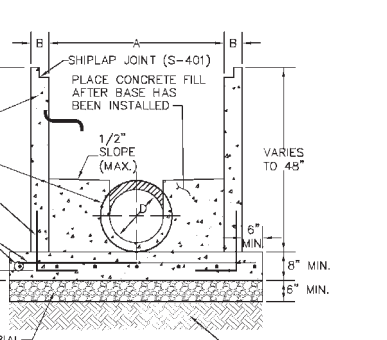

GRANULAR BEDDING MATERIAL (CLASS B BEDDING OR EQUIVALENT) COMPACTED TO 95% DENSITY IN ACCORDANCE WITH AASHTO T-180.

E 7/7 SECTION

SUITABLE SUBGRADE SEE NOTE 10 AND MH BASE NOTE 3.

TYP. DOWEL

PLAN STORM MH (TYPE C)

NO SCALE

f'_c = 4500 PSI
f_y = 60,000 PSI

TABLE I

PIPE DIAMETER	MH-BARREL DIAMETER
30" OR LESS	4'
33" – 36"	5'

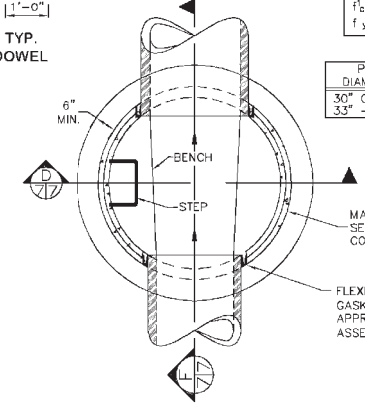

PLAN SAN MH (TYPE A)

NO SCALE

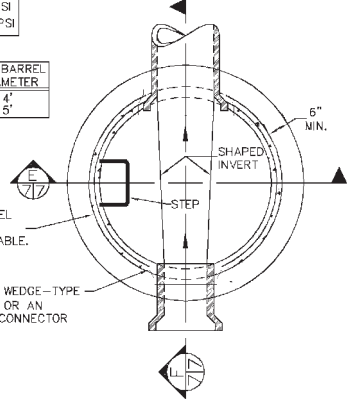

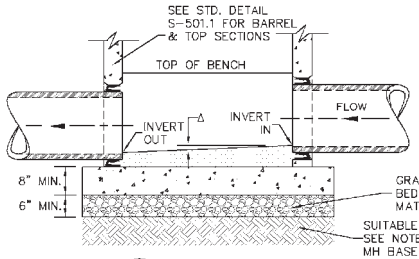

F 7/7 SECTION

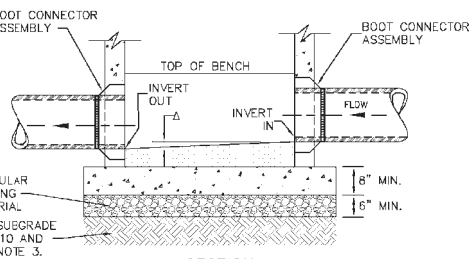

SECTION

BOOT TYPE ALTERNATIVE

PRECAST MANHOLE BASE

NO SCALE

PRECAST MANHOLE BASE NOTES:
1. THE BASE SLAB SHALL BE POURED MONOLITHICLY WITH BOTTOM RISER SECTION.
2. PRECAST MANHOLE BASES SHALL FIT THE CONDITIONS AND LOCATIONS FOR WHICH THEY ARE INTENDED WITHOUT ANY FIELD MODIFICATIONS. ANY MANHOLE BASE WHICH REQUIRES FIELD CUTTING OR MODIFICATION IN ORDER TO FIT THE LOCATIONS INTENDED SHALL BE REJECTED BY THE CITY AND REMOVED AND REPLACED BY THE CONTRACTOR AT NO COST TO THE CITY.
3. PRECAST MANHOLE BASES ARE TO BE BEDDED ON AN APPROVED GRANULAR BEDDING MATERIAL AS DETAILED ABOVE.

NO.	DATE	DESCRIPTION OF REVISIONS	BY
####	####	####	####
####	####	####	####
####	####	####	####
####	####	####	####
####	####	####	####
####	####	####	####

CITY AND COUNTY OF DENVER
DEPARTMENT OF PUBLIC WORKS
ENGINEERING DIVISION
CAPITAL PROJECTS MANAGEMENT
2000 W. 3RD AVE. - DENVER, CO 80223
TEL: (303) 446-3617 FAX: (303) 446-3617

STANDARD DETAILS
MANHOLE BASE CONSTRUCTION - TYPE A-C
PAGE 1

S-502

#

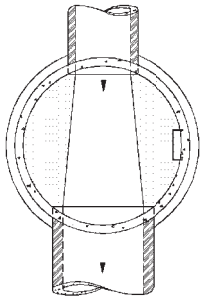

THROUGH PIPE
NO SCALE

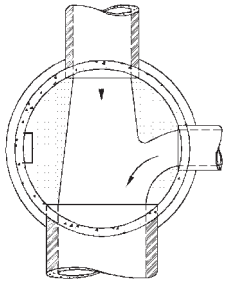

THROUGH PIPE - ONE LATERAL
NO SCALE

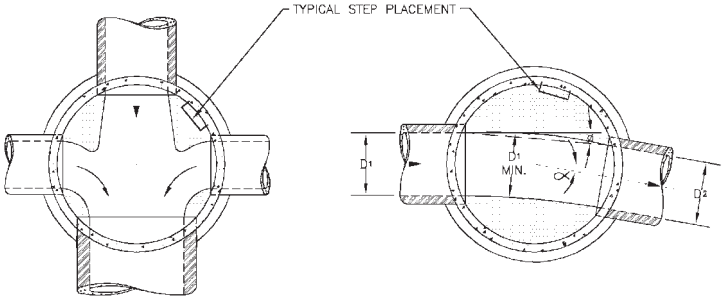

THROUGH PIPE - TWO LATERALS
NO SCALE

SLIGHT ANGLE
NO SCALE
$\phi \leq 15°$
$\alpha \leq 30°$

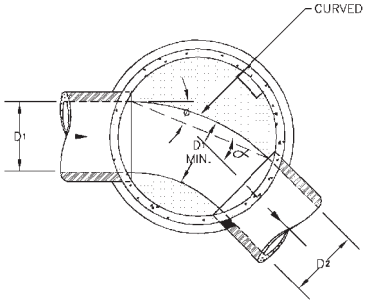

INTERMEDIATE ANGLE
NO SCALE
$\phi = \frac{\alpha}{2}$
$30° < \alpha < 90°$

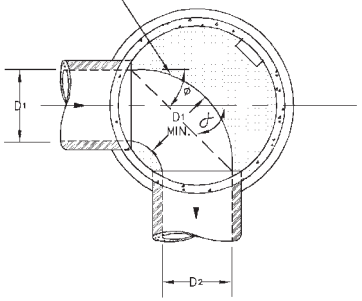

SHARP ANGLE
NO SCALE
$\phi = 45°$
$\alpha = 90°$

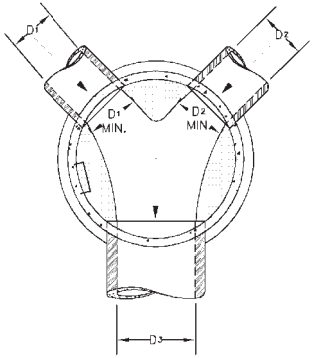

ANGLED LATERALS
NO SCALE

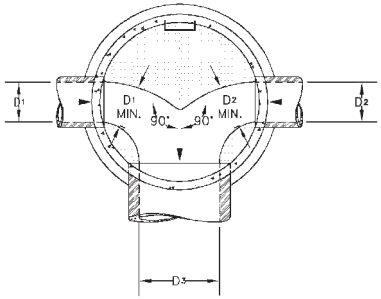

OPPOSED LATERALS
NO SCALE

NOTES:
1. DETAILS SHOWN ARE TYPICAL ONLY FOR INSTALLATIONS WITH ALL INVERTS AT SAME RELATIVE ELEVATION.
2. FOR EXCESSIVE ELEVATION DIFFERENCE BETWEEN INVERTS, ETC. SPECIAL BASE/CHANNEL DETAILS SHALL BE SHOWN ON PLANS.
3. CHANNELIZATION DETAILS & STEP PLACEMENT TYPICAL FOR BOTH STORM AND SANITARY SEWER MH'S.
4. THE MINIMUM VERTICAL DROP THRU MANHOLE BASE SHALL BE 0.10 FOOT FOR STORM SEWERS AND 0.2 FOOT FOR SANITARY SEWER.
5. FOR VERTICAL DROPS IN EXCESS OF 18", AN OUTSIDE DROP MANHOLE IS REQUIRED.

NO.	DESCRIPTION OF REVISIONS	DATE	BY
###		###	###
###	###	###	###
###	###	###	###
###	###	###	###
###	###	###	###
###	###	###	###
###	###	###	###

CITY AND COUNTY OF DENVER
DEPARTMENT OF PUBLIC WORKS
ENGINEERING DIVISION
CAPITAL PROJECTS MANAGEMENT
2000 W. 3RD AVE. DENVER, CO 80223
TEL.: (303) 446-3617 FAX: (303) 446-3647

STANDARD DETAILS
TYPICAL MANHOLE BASE CHANNELIZATION

S-520

###	
###	
###	
S520.DWG	
###	
11	

P:\P15015CCD\Dwg\FINAL SHEET SET\S520.DWG, 7/7/2015 6:23:02 AM, dbernier, PDF-Acro\Pkt Prop\c3, 1:1

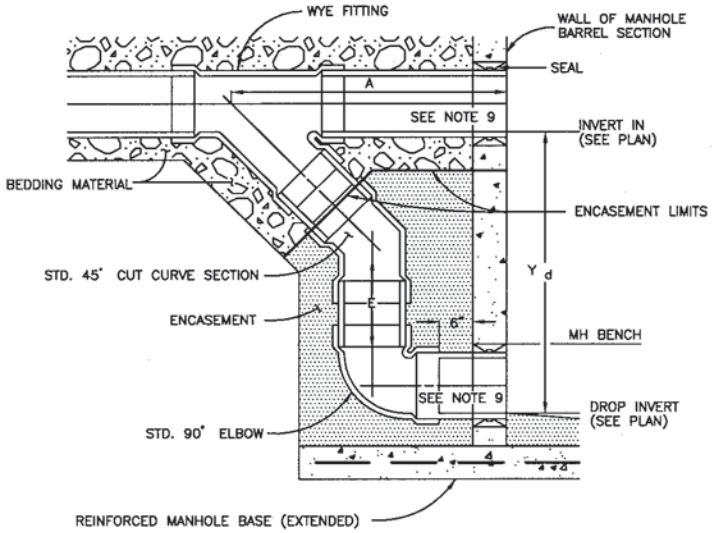

OUTSIDE DROP–DEEP: FOR PVC

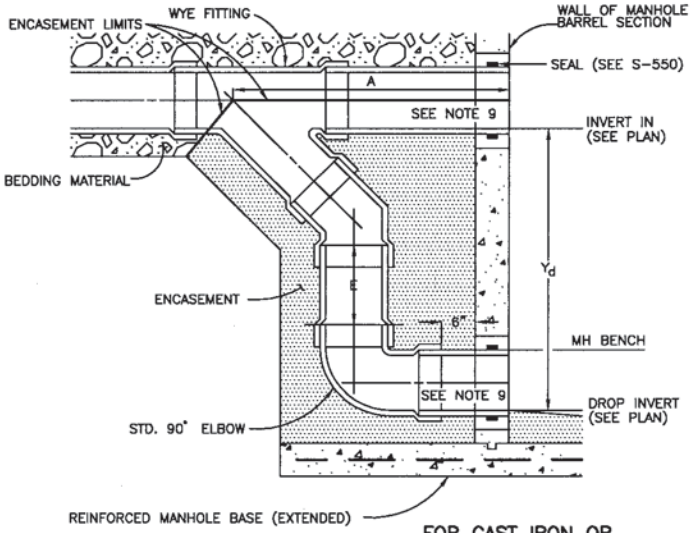

OUTSIDE DROP–DEEP: FOR CAST IRON OR DUCTILE IRON

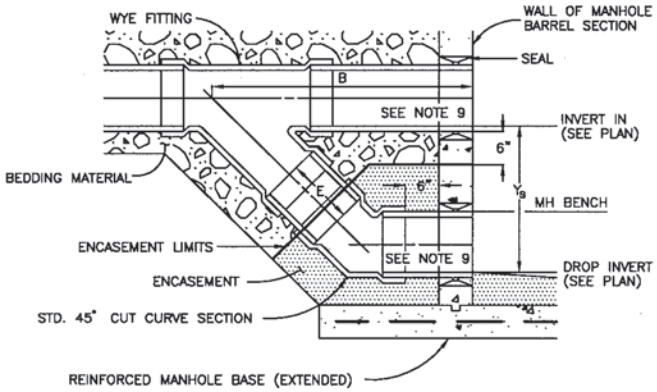

OUTSIDE DROP–SHALLOW: FOR PVC

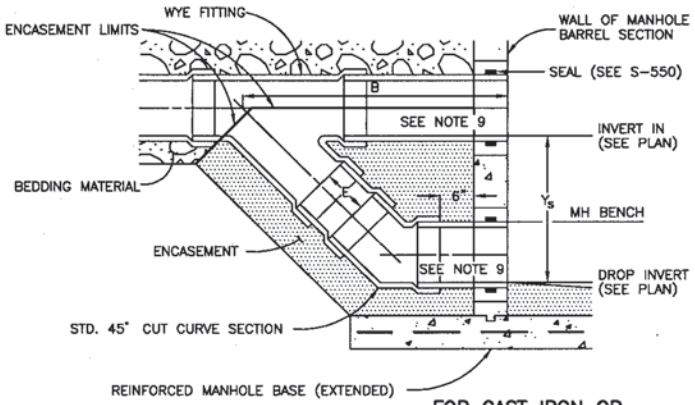

OUTSIDE DROP–SHALLOW: FOR CAST IRON OR DUCTILE IRON

DIMENSIONS (NOMINAL)	A (INCHES)				B (INCHES)				Y_d (INCHES)				Y_s (INCHES)			
PIPE DIAMETER (INCHES)	8	10	12	15	8	10	12	15	8	10	12	15	8	10	12	15
DUCTILE IRON PIPE (DIP)	32	37	39	44	36	39	42	50	30	33	39	44	18	18	18	24
POLYVINYL CHLORIDE (PVC)	42	47	49	65	41	43	51	61	31	37	39	55	18	18	22	28

A MANHOLE OUTSIDE DROP IS NOT FEASIBLE FOR A DROP OF LESS THAN 18". THE ABOVE DIMENSIONS INDICATE ONLY THE MINIMUM DROP OBTAINABLE WITH AVAILABLE FITTINGS AND MATERIAL. GREATER DROPS THAN THIS ARE POSSIBLE BY ADDITION OF THE APPROPRIATE PIPE LENGTH AT DIMENSION E.

GENERAL NOTES:
1. ALL PIPE AND FITTINGS TO BE ASTM AND CITY APPROVED.
2. FOR PAYMENT PURPOSES, ALL FITTINGS, PIPE, CONCRETE ENCASEMENT SHALL BE INCLUDED IN THE UNIT PRICE OF THE OUT
3. DIAMETER OF THE PIPE SHALL NOT BE LESS THAN MAIN LINE PIPE DIAMETER.
4. FOR 18" DIAMETER AND LARGER, OUTSIDE DROP SHALL BE A SPECIAL DESIGN.
5. THE APPROPRIATE MH SEAL, ADAPTOR OR CONNECTOR SHALL BE USED FOR THE SPECIFIED PIPE MATERIAL, AND SHALL BE DWMD APPROVED.
6. OUTSIDE DROP SHALL BE ALL OF ONE MATERIAL.
7. CONCRETE ENCASEMENT SHALL BE A MINIMUM OF 6" THICK ALL AROUND.
8. PIPE DIMENSIONS ARE APPROXIMATE AND MAY VARY FROM ONE MANUFACTURER TO ANOTHER.
9. ALL REQUIRED WALL OPENINGS SHALL BE PRECAST BLOCK-OUTS OR CORE DRILLED. JACK HAMMERING OF OPENINGS IS NOT ALLOWED.

REVISED	
BY	DATE

CITY AND COUNTY OF DENVER
DEPARTMENT OF PUBLIC WORKS
WASTEWATER MANAGEMENT DIVISION

STANDARD DETAILS
MANHOLE OUTSIDE DROPS
(DROP THROUGH MANHOLES < 18")

ISSUE DATE	DRAWN BY / CHECKED BY	SHEET NO. / OF	DRAWING NO.
6/94	DWK / LL	1 / 1 SHEETS	S-530

PLAN

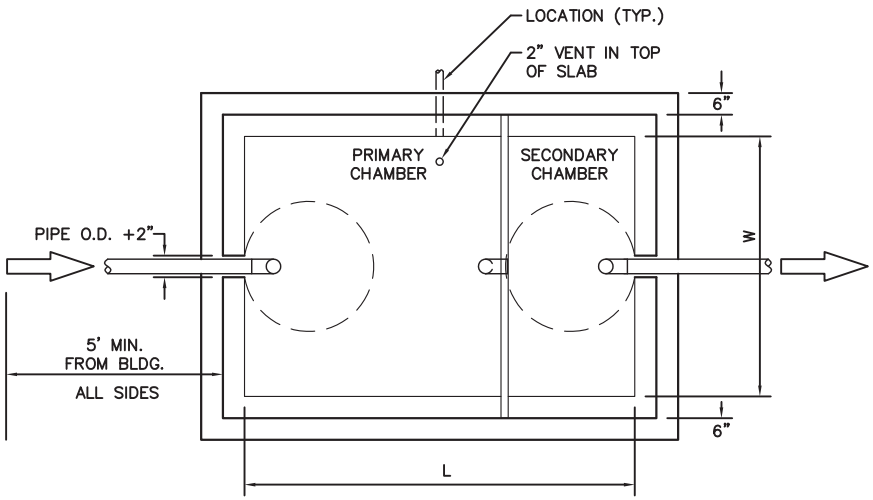

CAPACITY CHART

TOTAL WATER CAP. APPROX. (GALLONS)	GREASE CAP. APPROX. (CU. FT.)	DIMENSIONS (INCHES)						
		W	L	A	B	C	D	E
330	13	48	72	48	24	22	24	10
800	41	48	96	64	32	40	42	23
1190	61	72	96	64	32	40	42	23
1600	84	72	144	96	48	40	42	23
1840	103	72	144	96	48	46	48	28
2080	117	72	144	96	48	52	54	32
2560	150	72	144	96	48	64	68	41
3040	183	72	144	96	48	76	78	50
3280	202	72	144	96	48	82	84	55
3520	216	72	144	96	48	88	90	59

TOP OF VAULT BELOW FINISHED GRADE OR AT GRADE. IF BELOW GRADE, RING AND COVER SHALL BE ADJUSTED TO FINAL GRADE USING A MINIMUM OF 4" GRADE RING(S) AND A MAXIMUM OF 36" GRADE RING(S). A CONE IS REQUIRED FOR GREATER.

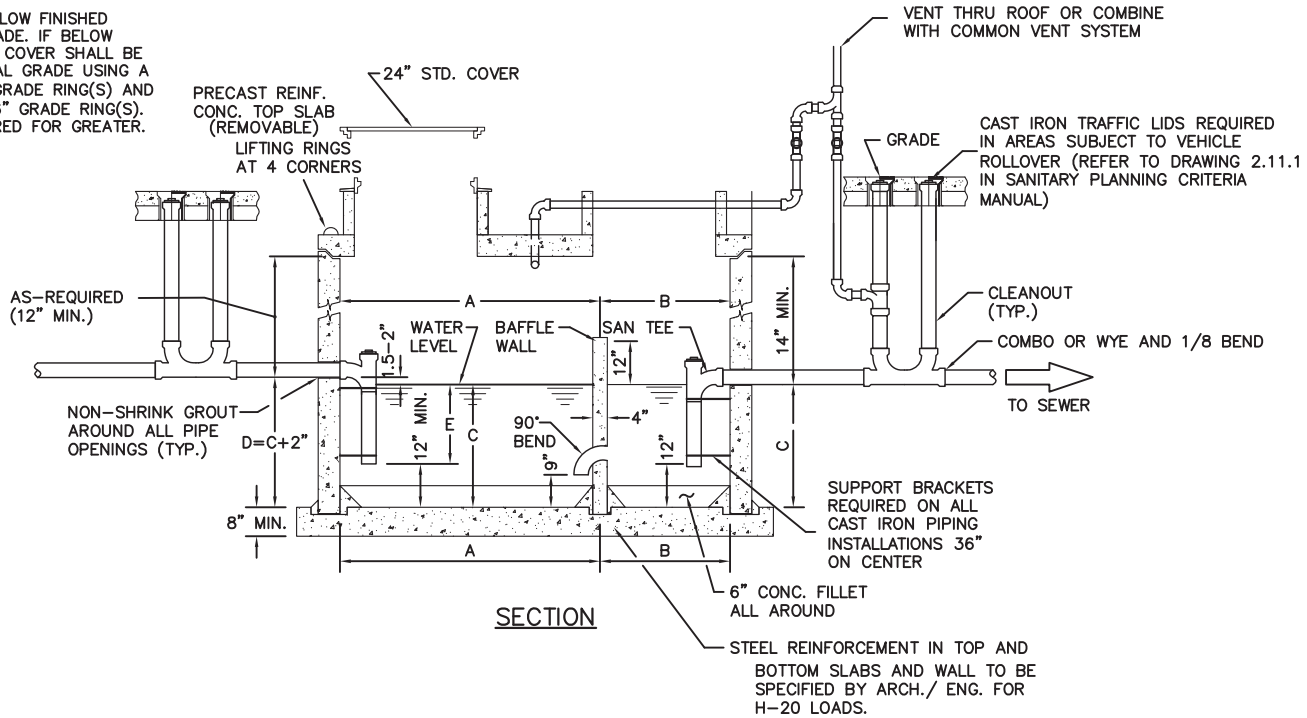

Grease Interceptor

REVISED	
BY	DATE

CITY AND COUNTY OF DENVER
DEPARTMENT OF PUBLIC WORKS
WASTEWATER MANAGEMENT DIVISION

Grease Interceptor

ISSUE DATE: JAN. 2013
DRAWN BY: DSA
CHECKED BY:

1/10/06; C:\PROJECT\041-159\OOOKAL\UG DETENTION V6.DWG